

M-CVM-AB-8I-8OR

M-CVM-AB-8I-8OR, Expansion module

Code: M56E02.

> Memory: No
> N° relays: 8
> Digital inputs: 8

Description

Expansion module with 8 digital inputs and 8 relay outputs.

Application

Digital inputs

- Reports via communications:
- Logic states of non-unit external systems
- Metering of the impulses generated by other units (water and gas meters, etc.)

Digital outputs

- Activation / deactivation by maximum or minimum instantaneous parameter values measured by the unit

Creation date: 23/11/2026 - CIRCUTOR, SAU reserves the right to make technical changes or modify the content/images of this document without prior notice, in order to improve its reliability, functionality, design or for other reasons.
It accepts no liability for any errors, inaccuracies or possible lack of information in this document.



M-CVM-AB-8I-8OR

Expansion modules M-CVM-AB-8I-8OR

Code: M56E02.

Specifications

DC power supply

Consumption	max. 3 W

Mechanical characteristics

Size (mm) width x height x depth	90 x 90 x 90 (mm)
Envelope	Self-extinguishing V0 plastic
Fastening	Panel
Weight (kg)	0,18

Environmental characteristics

Protection class	IP 30
Relative humidity (without condensation)	5 ... 95%
Storage temperature	-20... +80 °C
Working temperature	-10...+50 °C

Standards

Certifications	UL 61010-1 3rd edition, CAN/CSA-C22.2 No.61010-1 3rd. edition 2012-05
Electrical safety, Maximum height (m)	2000
Standards	IEC 61010-1 (1rd. Edition), UNE-EN 61000-6-2, UNE-EN 61000-6-4, IEC 60664-1, IEC 61010-2-030 (First Edition).

Voltage measurement circuit

Input impedance	32kΩ

Digital inputs

Input/output insulation	4 kV
Quantity	8
Type	Potential-free contact

Digital relay outputs

Electrical life (at maximum load)	10^5 cycles (250 Vaa/3 A)
Mechanical life	$2x10^7$ cycles
Maximum switching capacity	750 VA

Circutor
Creation date: 23/11/2026 - CIRCUTOR, SAU reserves the right to make technical changes or modify the content/images of this document without prior notice, in order to improve its reliability, functionality, design or for other reasons.
It accepts no liability for any errors, inaccuracies or possible lack of information in this document.



M-CVM-AB-8I-8OR

Expansion modules M-CVM-AB-8I-8OR

Code: M56E02.

CODE	TYPE	N° relays	Digital inputs
M56E02.	M-CVM-AB-8I-8OR	8	8

Creation date: 23/11/2026 - CIRCUTOR, SAU reserves the right to make technical changes or modify the content/images of this document without prior notice, in order to improve its reliability, functionality, design or for other reasons.
It accepts no liability for any errors, inaccuracies or possible lack of information in this document.



M-CVM-AB-8I-8OR

Expansion modules M-CVM-AB-8I-8OR

Code: M56E02.

Dimensions

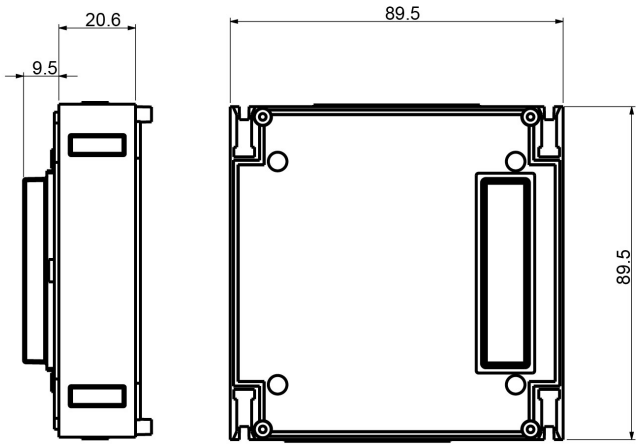

Connections

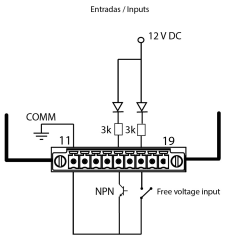

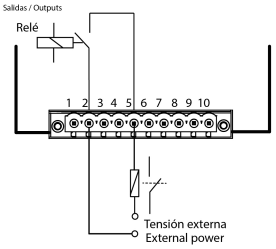

Creation date: 23/11/2026 - CIRCUTOR, SAU reserves the right to make technical changes or modify the content/images of this document without prior notice, in order to improve its reliability, functionality, design or for other reasons.
It accepts no liability for any errors, inaccuracies or possible lack of information in this document.