

CVM-B50-ITF

CVM-B50-ITF, Power analyzer 96 x 96

Code: M56910.

> Protocol: Modbus TCP/IP | BACnet/IP
> Memory: Yes
> Communications: Ethernet | Wi-Fi
> Transistor output: 2
> Nº relays: 2
> Digital inputs: 4
> Measuring Channels: 4
> Harmonics: 31
> Input current: .../5 A | .../1 A
> Mounting: Pannel
> Modules: 96 x 96

Description

The **CVM-B50** is a panel-mounted power analyzer (96 × 96 mm) with energy logging, downloadable memory, and **integrated web server**. It allows start-up via the app or web server without additional software and features an automatic wiring error correction system for simple installation.

Ideal for analysing electrical variables and consumption quality, including voltage and current **THD%**, as well as individual phase harmonics up to the 31st order. Neutral current measurement enables detection of imbalances and potential neutral conductor overloads.

Compact and versatile, it performs **four-quadrant** measurements (consumption and generation), suitable for both **Medium and Low Voltage installations.**
Characteristics of the device

- 40 days of built-in downloadable memory in CSV (mobile or PC)
- Configuration, display and start-up via app or web server
- Neutral current measurement
- THDU%, THDI%, and harmonics (up to 31st order)
- Automatic Autowiring system (wiring error correction)
- Wi-Fi and Ethernet communications (Modbus TCP/IP)
- 4 inputs, 2 relay outputs, and 2 digital outputs
- User-defined screen creation with selected variables
- Display of active quadrant and power usage percentage
- Current measurement via .../5 A, .../1 A, .../250 mA or flexible clamps (depending on model)
- On-screen indication of the status of outputs, inputs and/or active tariff
- Includes an operating-hours and working-hours counter for CAE

Application

The **CVM-B50** is specially designed to analyse changes in electrical variables, detect network harmonics, and measure energy, facilitating energy audits in accordance with ISO 50001 or obtaining CAE certification in the Spanish market.

Neutral current measurement allows the detection of circulating currents that may cause issues in the installation. The device can be integrated into SCADA systems for remote management and monitoring via Wi-Fi or wired Ethernet connection.

Creation date: 24/11/2026 - CIRCUTOR, SAU reserves the right to make technical changes or modify the content/images of this document without prior notice, in order to improve its reliability, functionality, design or for other reasons.
It accepts no liability for any errors, inaccuracies or possible lack of information in this document.



CVM-B50-ITF

Panel-mounted power analyzers

Code: M56910.

It features digital inputs for logging consumption from other meters via pulses, detecting the status of installation sensors, or distinguishing consumption by tariff. Additionally, the digital outputs allow automation of the installation through open/close commands based on any measured instantaneous value.

Creation date: 24/11/2026 - CIRCUTOR, SAU reserves the right to make technical changes or modify the content/images of this document without prior notice, in order to improve its reliability, functionality, design or for other reasons.
It accepts no liability for any errors, inaccuracies or possible lack of information in this document.



CVM-B50-ITF

Panel-mounted power analyzers

Code: M56910.

Specifications

AC power supply

Installation category	CAT III 300 V
Consumption	5 ... 8 VA
Frequency	50 ... 60 Hz
Nominal voltage	100 ... 240 V ~ ± 10%

DC power supply

Installation category	CAT III 300 V
Consumption	2.7 ... 3 W
Nominal voltage	100 ... 240 Vcc ± 10%

Mechanical characteristics

Size (mm) width x height x depth	96 x 96 x 67 (mm)
Envelope	Self-extinguishing V0 plastic
Fastening	Panel
Weight (kg)	0,363

Environmental characteristics

Protection class	IP 20, Front IP54
Relative humidity (without condensation)	5 ... 95%
Storage temperature	-25...+75 °C
Working temperature	-10 ...+50 °C

Current measurement circuit

Installation category	CAT III 300 V
Nominal current (In)	5A - .../5A , .../1 A
Minimum current measurement	10 mA

Voltage measurement circuit

Installation category	CAT III 300 V
Input impedance	400 kΩ
Frequency measuring range	50 ... 60 Hz
Nominal voltage	230V F-N, 400 V F-F
Minimum measurement voltage (Vstart)	11,5 V F-N
Maximum value	300 VF-N /520 VF-F

Standards

Electrical safety, Installation category	CAT III 300 V
Standards	IEC/EN 61010-1; IEC/EN 61010-2-030; IEC 613626-1; UNE-EN 55016-2-1; UNE-EN

Creation date: 24/11/2026 - CIRCUTOR, SAU reserves the right to make technical changes or modify the content/images of this document without prior notice, in order to improve its reliability, functionality, design or for other reasons.
It accepts no liability for any errors, inaccuracies or possible lack of information in this document.



CVM-B50-ITF

Panel-mounted power analyzers

Code: M56910.

	61000-4-2; UNE-EN 61000-4-20; UNE-EN 61000-4-4; UNE-EN 61000-4-5; UNE-EN 61000-4-6; UNE-EN 61000-4-8; UNE-EN IEC 61000-4-11; UNE-EN 61000-4-3; UNE-EN 60068-2-1; UNE-EN 60068-2-2; UNE-EN 60068-2-78; ETSI-EN 301 489-1 Ver. 2.2.3; ETSI-EN 301 489-17 Ver. 3.3.1; EN-18031-1; IEC 61557-12

User interface

LED	2 LED
Keyboard	3 keys
Display type	LCD Custom COG

Digital inputs

Input/output insulation	2000 V
Quantity	4
Type	NPN

Digital relay outputs

Electrical life (at maximum load)	$60x10^3$ cycles
Mechanical life	$10x10^6$ cycles
Maximum switching capacity	625 VA / 75 W (AC1)

Digital transistor outputs

Pulse width	30 ms a 400 ms (Programmable)
Quantity	2
Type	NPN
Maximum frequency	16 imp / s
Maximum current	50 mA
Maximum voltage	24 Vdc

Measurement accuracy

Phase current measurement	0.2% (10% In ≤ I ≤ 120%In)
Reactive power measurement (kvar)	1% ± 2 digit
Apparent power measurement (kVA)	0.5% ± 2 digit
Active power measurement (kW)	0.5% ± 2 digit
Phase voltage measurement	0.2% (20 ... 120% Un)

CVM-B50
Panel Mounted power analyzer with memory

CODE	TYPE	Input current	Transistor output	N° relays	Digital inputs	Communications	Protocol	Harmonics	Memory
M56910.	CVM-B50-ITF	.../5 A | .../1 A	2	2	4	Ethernet | Wi-Fi	Modbus TCP/IP | BACnet/IP	31	Yes

Creation date: 24/11/2026 - CIRCUTOR, SAU reserves the right to make technical changes or modify the content/images of this document without prior notice, in order to improve its reliability, functionality, design or for other reasons.
It accepts no liability for any errors, inaccuracies or possible lack of information in this document.



CVM-B50-ITF

Panel-mounted power analyzers

Code: M56910.

CODE	TYPE	Input current	Transistor output	N° relays	Digital inputs	Communications	Protocol	Harmonics	Memory
M569100020000	CVM-B50-ITF	.../5 A | .../1 A	2	2	4	Ethernet | Wi-Fi	Modbus TCP/IP | BACnet/IP	31	Yes
M56920.	CVM-B50-MC	.../250 mA	2	2	4	Ethernet | Wi-Fi	Modbus TCP/IP | BACnet/IP	31	Yes
M569200020000	CVM-B50-MC	.../250 mA	2	2	4	Ethernet | Wi-Fi	Modbus TCP/IP | BACnet/IP	31	Yes
M56930.	CVM-B50-FLEX	Rogowski	2	2	4	Ethernet | Wi-Fi	Modbus TCP/IP | BACnet/IP	31	Yes
M569300020000	CVM-B50-FLEX	Rogowski	2	2	4	Ethernet | Wi-Fi	Modbus TCP/IP | BACnet/IP	31	Yes

Automatically resolves wiring errors via autowiring system

Creation date: 24/11/2026 - CIRCUTOR, SAU reserves the right to make technical changes or modify the content/images of this document without prior notice, in order to improve its reliability, functionality, design or for other reasons.
It accepts no liability for any errors, inaccuracies or possible lack of information in this document.



CVM-B50-ITF

Panel-mounted power analyzers

Code: M56910.

Dimensions

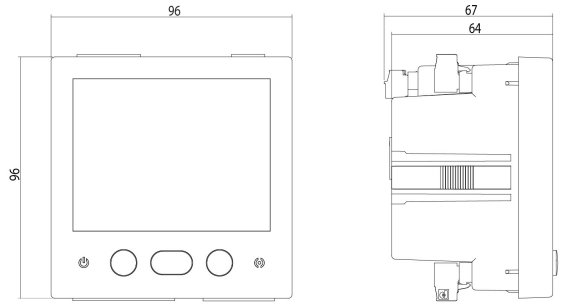

Connections

Red trifásica 4 hilos
Three-phase 4-wire network

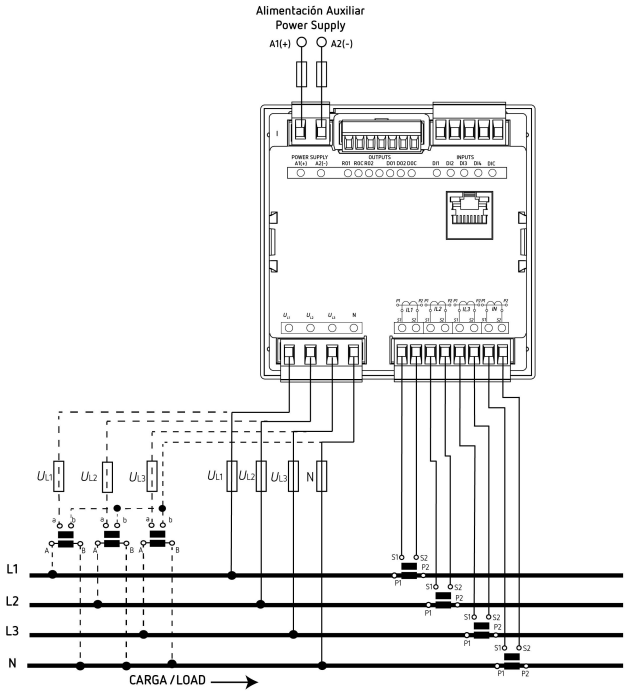

Creation date: 24/11/2026 - CIRCUTOR, SAU reserves the right to make technical changes or modify the content/images of this document without prior notice, in order to improve its reliability, functionality, design or for other reasons.
It accepts no liability for any errors, inaccuracies or possible lack of information in this document.