

CVM-E3-MINI-ITF-WiEth

CVM-E3-MINI-ITF-WiEth, DIN rail three-phase power analyser

Code: M56470.

> Protocol: Modbus TCP/IP
> Communications: Ethernet | Wi-Fi
> Harmonics: 31
> Power supply (Vac): 90...264 Vac/Vdc
> Input current: .../5 A | .../1 A
> Mounting: DIN rail

Description

Three-phase electrical network analyser (balanced and unbalanced) for DIN rail mounting and panel option with 72x72 adapter, with measurements in 4 quadrants.

Other features are:

- Current measurement with ITF measuring transformers .../5 A,.../1A, **MC** transformers .../250 mA and **FLEX-MAG** clamps, according to type
- With ITF technology: ITF galvanic insulation protection
- DIN rail format with only 3 modules
- High contrast backlit display
- 72x72 mm panel mounting with front adapter
- Ethernet, Wi-Fi communications
- Configuration of communications on the App (MyConfig) and on the website.
- Sealable terminal cover
- Display of voltage and current harmonics up to 31º

Application

- Control application in switchboards and low and medium voltage connections where there is a need for an analyser on the DIN rail.
- Instantaneous data capture, maximum and minimum levels of electrical parameters measured.
- Installation with Ethernet cable (RJ-45)
- Installation without the need for communications wiring in facilities that have a Wi-Fi network.

Creation date: 23/11/2026 - CIRCUTOR, SAU reserves the right to make technical changes or modify the content/images of this document without prior notice, in order to improve its reliability, functionality, design or for other reasons.
It accepts no liability for any errors, inaccuracies or possible lack of information in this document.



CVM-E3-MINI-ITF-WiEth

Three-phase power analyzer for DIN rail, Wi-Fi

Code: M56470.

Specifications

AC power supply

Installation category	CAT III 300 V
Consumption	3,5 VA
Frequency	50...60 Hz
Nominal voltage	207...253 Vc.a.

Mechanical characteristics

Size (mm) width x height x depth	52.5 x 118 x 74 (mm)
Envelope	Self-extinguishing V0 plastic
Fastening	DIN rail
Weight (kg)	0,25

Environmental characteristics

Protection class	IP 30 / Front: IP 40
Relative humidity (without condensation)	5...95%
Storage temperature	-30 ... +80 °C
Working temperature	-10 ... +50 °C

Current measurement circuit

Installation category	CAT III 300 V
Nominal current (In)	.../5 A or .../1 A
Phase current measuring range	2...120% In
Maximum input current consumption	0,9 VA
Minimum current measurement	10 mA

Voltage measurement circuit

Installation category	CAT III 300 V
Input impedance	400 kΩ
Frequency measuring range	45...65 Hz
Nominal voltage	300V Ph-N, 520V Ph-Ph
Minimum measurement voltage (Vstart)	11 V Ph-N

Communication Network

Protocol	ModBus TCP/IP
Technology / Interface	Ethernet

Standards

Electrical safety, Maximum height (m)	2000
Standards	IEC 61010-1, IEC 61010-2-030, IEC 61326-1, IEC 61557-12 , UL94



CVM-E3-MINI-ITF-WiEth

Three-phase power analyzer for DIN rail, Wi-Fi

Code: M56470.

User interface

LED	2 LED
Keyboard	3 keys
Display type	LCD Custom COG

Measurement accuracy

Frequency measurement	0.5 %
Phase current measurement	0,5% ± 1 digit
Active power measurement (kW)	0.5 % ±2 digit
Phase voltage measurement	0.5% ± 1 digit

Wireless communication

Band	802.11 b/g/n (2.4 GHz.)
Technology / Type	Wi-Fi

CVM-E3-MINI-WiEth
Power analyzer, three-phase DIN rail, wi-fi

CODE	TYPE	Input current	Communications	Protocol
Power supply 90...264 Vac/Vdc				
M56470.	CVM-E3-MINI-ITF-WiEth	.../5 A | .../1 A	Ethernet | Wi-Fi	Modbus TCP/IP
M56480.	CVM-E3-MINI-MC-WiEth	.../250 mA	Ethernet | Wi-Fi	Modbus TCP/IP
M56490.	CVM-E3-MINI-FLEX-WiEth	Rogowski	Ethernet | Wi-Fi	Modbus TCP/IP

"Built-in wireless communication on all WiEth models for configuration via free app (MyConfig) RS-485 models, possibility of switching power supply Consult additional benefits"

Creation date: 23/11/2026 - CIRCUTOR, SAU reserves the right to make technical changes or modify the content/images of this document without prior notice, in order to improve its reliability, functionality, design or for other reasons.
It accepts no liability for any errors, inaccuracies or possible lack of information in this document.



CVM-E3-MINI-ITF-WiEth

Three-phase power analyzer for DIN rail, Wi-Fi

Code: M56470.

Dimensions

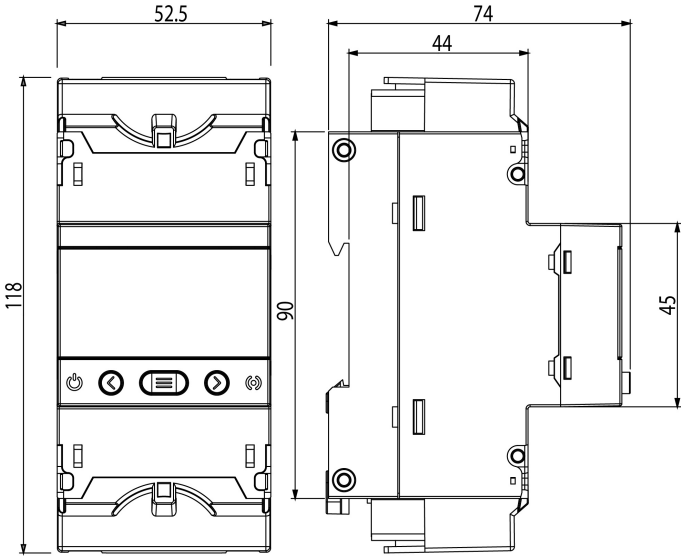

Connections



