

# CVM-B100-ITF-485-ICT2

CVM-B100-ITF-485-ICT2, Power analyzer

Code: M56011.

> Protocol: Modbus RTU | BACnet
> Energy accuracy: 0,5 S (.../5A)
> Communications: RS-485
> Transistor output: 2
> N° relays: 2
> Digital inputs: 2
> Input current: .../5 A | .../1 A | .../250 mA
> Mounting: Pannel
> Modules: 96 x 96

## Description

The **CVM-B100** and **CVM-B150** units are panel mounted three-phase power analyzers (dimensions: 96x96 and 144x144 mm, respectively). Both offer 4-quadrant measurement (consumption and generation). Suitable for Medium or Low voltage installations, in both 3 or 4-wire three-phase circuits, two-phase circuits with or without neutral, single-phase circuits or ARON connections.

The **CVM-B100** and **CVM-B150** high-performance units feature a measurement engine that allows the user to analyse many different electrical parameters, in addition to offering a large variety of optional expansion modules for the same unit.

**Features:**

- Format: 96x96 (**CVM B100**) and 144x144 (**CVM B150**)
- High-resolution VGA colour screen
- IP 65 front panel protection (with sealing joint)
- 5 voltage inputs (3 phases + neutral + earth) 1000 $V_{f-f}$
- 4 Current inputs, ITF
- Class 0.2 voltage and current accuracy
- Class 0.5S energy accuracy
- Expandable unit, up to 4 modules, combining digital and analogue outputs, Modbus/TCP, MBus, LonWorks, Profibus, XML/Web
- Modular (optional addition of expansion modules)
- Touch-sensitive movement buttons
- Universal power supply source
- RS485 communications port (Modbus/RTU and BACnet protocols)
- Customisation of parameters to be displayed
- Operating hour indicator for preventive maintenance.

**Other features:**

- Innovative SCV interface (Slide, Choose & View) for versatile data display, enabling the customisation of the parameters displayed on the screen
- Electrical parameters: instantaneous, maximum, minimum (with date and time) and demand
- Incremental electrical parameters (energy), times, costs, emissions
- 3 Tariffs (can be selected via the digital input or RS485 communications)
- Capable of showing costs and $kgCO_2$ emission sources on the screen, depending on the energy consumed or generated
- 2 Relay outputs for alarms with delay, times, ON and OFF, etc.



# CVM-B100-ITF-485-ICT2

Power analyzers for panel

Code: M56011.

- 2 transistor outputs for alarms or impulse generation, with all the possible configuration parameters
- 2 digital inputs, with control over the selection of the unit's tariffs or configurable for monitoring purposes, with RS-485 Modbus communications, monitoring of logical states of other electromechanical units. (RCCBs, thermal-magnetic circuit breakers, etc.)

## Application

- Control and monitoring of all electrical parameters measured in any electric distribution panel and low and high-voltage connection points.
- 4 alarms (2 per transistor and 2 per relay), fully and independently programmable: low or high value, hysteresis, connection/disconnection delays, normally open or closed standby status and interlocking.
- Generation of impulses with transistor outputs, fully and independently configurable over any incremental parameter (energy, costs, $kgCO_2$, total meter or tariff hours)
- Transducer that converts analogue signals to any instantaneous parameter that the unit can measure or calculate, with built-in expansion modules with analogue outputs.
- Display of process signals, with a built-in expansion module with analogue inputs; optional reporting of these signals to SCADA systems through communication systems
- Control of electrical load or alarm signal operations by programming the transistor or relay outputs that are built-in or added through expansion modules.
- Autonomous datalogger with web server, connected to a **M-CVMAB-Datalogger** module. Enables direct monitoring of the historical data stored in the unit via a conventional web browser.

### 400 Hz Applications

**CVM-B150** provides a version adapted to 400 Hz networks specially designed for applications such as:

- Aeronautical
- Astronautics
- Naval
- Military



Creation date: 24/11/2026 - CIRCUTOR, SAU reserves the right to make technical changes or modify the content/images of this document without prior notice, in order to improve its reliability, functionality, design or for other reasons.
It accepts no liability for any errors, inaccuracies or possible lack of information in this document.



# CVM-B100-ITF-485-ICT2

Power analyzers for panel

Code: M56011.

## Specifications

### AC power supply

| | |
|---|---|
| Installation category | CAT III 300 V |
| Consumption | máx. 23.9 VA |
| Frequency | 45 ... 65Hz |
| Nominal voltage | 100 ... 240 V ~ |

### DC power supply

| | |
|---|---|
| Installation category | CAT III 300 V |
| Consumption | max. 12.2 W |
| Nominal voltage | 120 ... 300 Vdc |

### Mechanical characteristics

| | |
|---|---|
| Size (mm) width x height x depth | 97 x 99 x 99 (mm) |
| Envelope | Self-extinguishing V0 plastic |
| Fastening | Panel 92x92 |
| Weight (kg) | 0,516 |

### Environmental characteristics

| | |
|---|---|
| Protection class | IP 40 (Front), IP 65 (Sealing), IP 30 (unmounted) |
| Relative humidity (without condensation) | 5 ... 95% |
| Storage temperature | -20... +80 °C |
| Working temperature | -10...+60 °C |

### Standards

| | |
|---|---|
| Certifications | UL 61010-1 3rd edition, CAN/CSA-C22.2 No.61010-1 3rd. edition 2012-05 |
| Electrical safety, Maximum height (m) | 2000 |
| Standards | IEC 61010-1 (1rd. Edition), UNE-EN 61000-6-2, UNE-EN 61000-6-4, IEC 60664-1, IEC 61010-2-030 (First Edition). Measurement according to IEC 61557-12 |

### Current measurement circuit

| | |
|---|---|
| Installation category | CAT III 600 V |
| Nominal current (In) | .../5A, .../1A, .../0.250A |
| Phase current measuring range | 0.01...10A (.../5A),0.01...2A (.../1A), 0.01...0.5A (.../0.250A) |
| Neutral current measuring range | 0.02...0.5A (.../0.250A, calculated) |
| Maximum input current consumption | 0,9 VA |
| Maximum pulse current | 100 A |
| Minimum current measurement | 0,01 A (.../5A, .../1A, .../0,250A |



Creation date: 24/11/2026 - CIRCUTOR, SAU reserves the right to make technical changes or modify the content/images of this document without prior notice, in order to improve its reliability, functionality, design or for other reasons.
It accepts no liability for any errors, inaccuracies or possible lack of information in this document.



# CVM-B100-ITF-485-ICT2

Power analyzers for panel

Code: M56011.

## Voltage measurement circuit

| | |
|---|---|
| Installation category | CAT III 600V |



Creation date: 24/11/2026 - CIRCUTOR, SAU reserves the right to make technical changes or modify the content/images of this document without prior notice, in order to improve its reliability, functionality, design or for other reasons.
It accepts no liability for any errors, inaccuracies or possible lack of information in this document.



# CVM-B100-ITF-485-ICT2

Power analyzers for panel

Code: M56011.

| | |
|---|---|
| Input impedance | 1.2MΩ |
| Frequency measuring range | 40...70Hz |
| Voltage measuring range | 20...600 V~ |
| Maximum input voltage consumption | 0,15VA |
| Minimum measurement voltage (Vstart) | 10 V~ |

## User interface

| | |
|---|---|
| Display format | 4:3 |
| LED | 3 LED (CPU-Keys-ALARM) |
| Resolution of the display | VGA (640x480) |
| Keyboard | Capacitive, 3 keys |
| Display type | TFT color |
| Visible display area size | 3.5" |

## Digital inputs

| | |
|---|---|
| Input/output insulation | 4 kV |
| Quantity | 2 |
| Type | Potential-free contact |
| Maximum short-circuit current | 5 mA |
| Maximum open circuit voltage | 15 Vdc |

## Digital relay outputs

| | |
|---|---|
| Electrical life (at maximum load) | $3x10^4$ cycles |
| Mechanical life | $1x10^7$ cycles |
| Maximum switching capacity | 1500 VA |

## Digital transistor outputs

| | |
|---|---|
| Pulse width | 1 ms |
| Quantity | 2 |
| Type | NPN |
| Pulse output, time period (Ton / Toff) | 0,3 ms/0,7 ms |
| Maximum frequency | 1 kHz |
| Maximum current | 130 mA |
| Maximum voltage | 48 Vdc |

## Measurement accuracy

| | |
|---|---|
| Frequency measurement | Class 0.1 (.../5A, .../1A, .../0.250A) |
| Phase current measurement | class 0,2 ±1 digit 0.05...8A (.../5A),0.01...1.2A ( .../1A), 0,01 ... 0,3A (.../0,250A) |
| Neutral current measurement | class 1 ±1 digit 0.05...6A (.../5A),0.05...1.2A ( .../1A), calculated (.../0.250A) |
| Reactive energy measurement (kvarh) | (IEC 62053-23) Class 1 (.../5A), Class 2 (.../1A, .../0.250A) |
| Reactive power measurement (kvar) | (Vn 230/110 Vac) Class 1 ±1 digit 0.05...6A (.../5A),0.01...1.2A ( .../1A), 0.01...0.3A |



# CVM-B100-ITF-485-ICT2

Power analyzers for panel

Code: M56011.

| | |
|---|---|
| | (.../0.250A) |
| Apparent power measurement (kVA) | (Vn 230/110 Vac) class 0.5 ±1 digit 0.05...6A (.../5A),0.01...1.2A ( .../1A), 0.01...0.3A (.../0.250A) |
| Active energy measurement (kWh) | (IEC 62053-22) Class 0.5S (.../5A), Class 1 (.../1A), Class 1 (.../0.250A) |
| Active power measurement (kW) | (Vn 230/110 Vac) class 0.5 ±1 digit 0.05...6A (.../5A),0.01...1.2A ( .../1A), 0.01...0.3A (.../0.250A) |
| Power factor measurement | class 0,5 (.../5A, .../1A, .../0.250A) |
| Current THD | class 1 (.../5A, .../1A, .../0.250A) |
| Voltage THD | class 1 (.../5A, .../1A, .../0.250A) |
| Phase voltage measurement | Class 0.2 ±1 digit (20...600 Vca, .../5A, .../1A, .../0.250A) |
| Neutral voltage measurement | Class 0.5 ±1 digit (50...600 Vca, .../5A, .../1A, .../0.250A) |
| Current harmonics (THD) | class 1 (.../5A, .../1A, .../0.250A) |
| Voltage harmonics (THD) | class 1 (.../5A, .../1A, .../0.250A) |

**Serial communication**

| | |
|---|---|
| Protocol | ModBus/RTU, BACnet |
| Technology / Type | RS-485 / BACnet |

**CVM-B**

Power analyzer, colour display, panel mounted

| CODE | TYPE | Input current | Transistor output | Nº relays | Digital inputs | Communications | Protocol |
|---|---|---|---|---|---|---|---|
| M56011. | CVM-B100-ITF-485-ICT2 | .../5 A \| .../1 A \| .../250 mA | 2 | 2 | 2 | RS-485 | Modbus RTU \| BACnet |
| M56111. | CVM-B150-ITF-485-ICT2 | .../5 A \| .../1 A \| .../250 mA | 2 | 2 | 2 | RS-485 | Modbus RTU \| BACnet |

4-quadrant measuring unit. See expansion modules and accessories (Sealing gaskets) for CVM-A / CVM-B



Creation date: 24/11/2026 - CIRCUTOR, SAU reserves the right to make technical changes or modify the content/images of this document without prior notice, in order to improve its reliability, functionality, design or for other reasons.
It accepts no liability for any errors, inaccuracies or possible lack of information in this document.



# CVM-B100-ITF-485-ICT2

Power analyzers for panel

Code: M56011.

## Dimensions

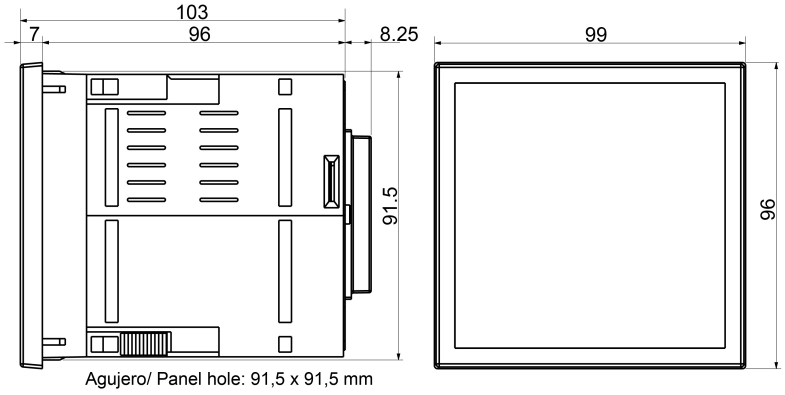


Agujero/ Panel hole: 91,5 x 91,5 mm

## Connections

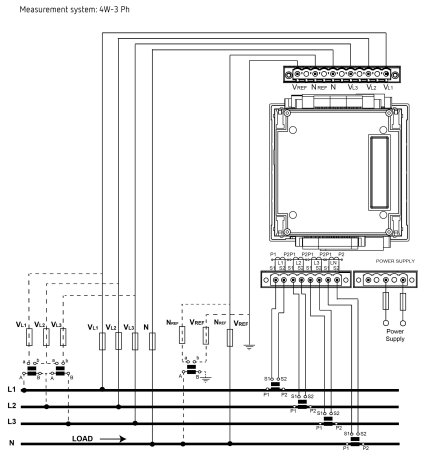


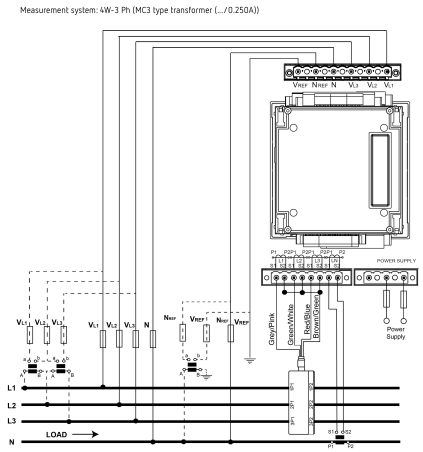




Creation date: 24/11/2026 - CIRCUTOR, SAU reserves the right to make technical changes or modify the content/images of this document without prior notice, in order to improve its reliability, functionality, design or for other reasons.
It accepts no liability for any errors, inaccuracies or possible lack of information in this document.