

kit CVM-D421+2xSCV1

kit CVM-D421+2xSCV1, 2/6 single-phase and/or three-phase network analysers with memory, DIN rail

Code: M55136.

> Protocol: Modbus TCP/IP |Modbus RTU
> Memory: Yes
> Clamp: 6
> Communications: Wi-Fi | Ethernet | RS-486
> Transistor output: 2
> Harmonics: 15
> Input current: .../333 mV
> Mounting: DIN rail
> Nª Input channels: 1...2(III) | 1...6(II)

Description

The **CVM-D400** series are multi-channel power analysers designed for reading multiple loads or circuits (Branch Circuit Monitoring). These devices can manage up to 12 single-phase or 4 three-phase lines or loads, or any combination of them in a single device. They also allow each type of consumption to be labelled, grouping together the total consumption of all the loads destined for the same purpose without the need for any type of programming. The results are automatically displayed on screen or via communications. The devices are configured via an integrated web interface, accessible via Wi-Fi or Ethernet, or directly from the ***MyConfig App***. Both options allow the connection to be checked and modified via the 'autowiring' option, avoiding wiring errors and saving time during commissioning.

Application

- Measurement of electrical parameters in multi-channel installations, such as data processing centres and switchboards of single-phase loads.
- Simultaneous measurement at 4 different points in three-phase installations
- Its compact size is perfect for assembly on electric panels.



kit CVM-D421+2xSCV1

Multi-channel network analyser with memory, DIN rail

Code: M55136.

Specifications

Mechanical characteristics

Size (mm) width x height x depth	105 x 104 x 72 (mm)
Envelope	Self-extinguishing V0 plastic
Fastening	DIN rail
Weight (kg)	0,8

Environmental characteristics

Protection class	IP30, Front panel: IP40
Relative humidity (without condensation)	5 ... 95%
Storage temperature	10 °C... +75 °C
Working temperature	-10 °C... +60 °C

Current measurement circuit

Installation category	CAT III 300 V
Nominal current (In)	... / 0,333 V
Maximum input current consumption	0,18 VA x 2
Maximum current	399 mV
Minimum current measurement	11 mV

Voltage measurement circuit

Installation category	CAT III 300 V
Sampling frequency	45...65 Hz
Input impedance	0,4 MΩ
Frequency measuring range	45...65 Hz
Voltage measuring range	120... 300 V~Ph-N / 120 ... 520 V ~ph-ph
Maximum input voltage consumption	5...8 VA
Minimum measurement voltage (Vstart)	120 V ~

Communication Network

Connection mechanism	RJ-45
Connection mode	DHCP ON/OFF
Protocol	Modbus TCP - Web server - Web socket
Technology / Interface	Ethernet 10BaseT - 100BaseTX

Standards

Electrical safety, Maximum height (m)	2000
Electrical safety, Installation category	CAT III 300 V
Electrical safety, Contamination level/class	Pollution resistance 2
Standards	UNE-EN 61000-4-4, UNE-EN 61000-4-5, UNE-EN 61000-4-11,UNE-EN

Creation date: 23/11/2026 - CIRCUTOR, SAU reserves the right to make technical changes or modify the content/images of this document without prior notice, in order to improve its reliability, functionality, design or for other reasons.
It accepts no liability for any errors, inaccuracies or possible lack of information in this document.



kit CVM-D421+2xSCV1

Multi-channel network analyser with memory, DIN rail

Code: M55136.

	61000-6-3, UNE-EN 61000-6-1, UNE-EN 61010-1, UNE-EN 60068-2-1, UNE-EN 60068-2-2,UNE-EN 60068-2-78, IEC 61010-2-030, IEC 61326-1, UNE-EN 61000-4-20, ETSI EN 301 489-1 V2.2.3, ETSI EN 301 489-17 V3.2.4

User interface

LED	2 LED
Keyboard	3 keys
Display type	LCD

Digital transistor outputs

Pulse width	30 ... 500 ms
Quantity	2
Type	NPN
Maximum frequency	5 imp/s
Maximum current	50 mA
Maximum voltage	24 Vdc

Measurement accuracy

Phase current measurement	0,5% (10... 120%)
Active energy measurement (kWh)	1%
Active power measurement (kW)	1%
Phase voltage measurement	0,5%

Serial communication

Protocol	Modbus RTU
Technology / Type	RS-485

Wireless communication

Band	2,4 GHz (2,4...2,5 GHz)
Technology / Type	Wi-Fi

CVM-D400

2/6 or 4/12 single-phase and/or three-phase network analysers with memory, DIN rail

CODE	TYPE	Input current	Nº Input channels	Transistor output	Communications	Protocol	Harmonics	Clamp
M551A2.	CVM-D420-MC	.../250 mA	1...2(III) | 1...12(II)	2	Wi-Fi | Ethernet | RS-485	Modbus TCP/IP |Modbus RTU	15	
M55132.	CVM-D421-SCV	.../333 mV	1...2(III) | 1...6(II)	2	Wi-Fi | Ethernet | RS-485	Modbus TCP/IP |Modbus RTU	15	
M551A4.	CVM-D440-MC	.../250 mA	1...4(III) | 1...12(II)	4	Wi-Fi | Ethernet | RS-485	Modbus TCP/IP |Modbus RTU	15	
M55134.	CVM-D441-SCV	.../333 mV	1...4(III) | 1...12(II)	4	Wi-Fi | Ethernet | RS-485	Modbus TCP/IP |Modbus RTU	15	
Kits								
M55136.	kit CVM-D421+2xSCV1	.../333 mV	1...2(III) | 1...6(II)	2	Wi-Fi | Ethernet | RS-486	Modbus TCP/IP |Modbus RTU	15	3 x SCV
M55138.	kit CVM-D441+4xSCV1	.../333 mV	1...4(III) | 1...12(II)	4	Wi-Fi | Ethernet | RS-487	Modbus TCP/IP |Modbus RTU	15	3 x SVC



kit CVM-D421+2xSCV1

Multi-channel network analyser with memory, DIN rail

Code: M55136.

-MC models require MC1/MC3 type transformers and -SCV models require SCV1 type transformers, whose current terminals are included with the transformers, not with the equipment.

Creation date: 23/11/2026 - CIRCUTOR, SAU reserves the right to make technical changes or modify the content/images of this document without prior notice, in order to improve its reliability, functionality, design or for other reasons.
It accepts no liability for any errors, inaccuracies or possible lack of information in this document.



kit CVM-D421+2xSCV1

Multi-channel network analyser with memory, DIN rail

Code: M55136.

Dimensions

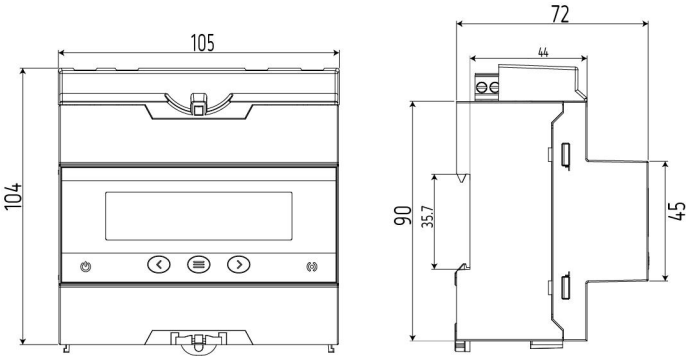

Connections

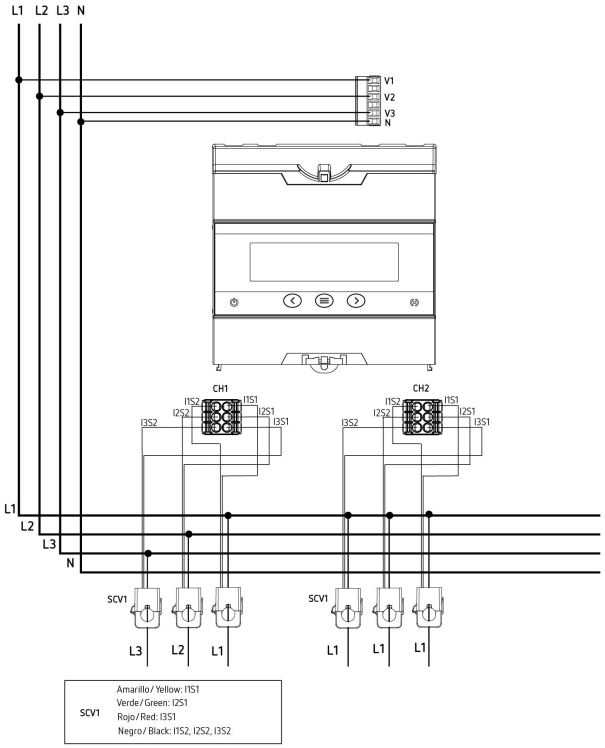

Creation date: 23/11/2026 - CIRCUTOR, SAU reserves the right to make technical changes or modify the content/images of this document without prior notice, in order to improve its reliability, functionality, design or for other reasons.
It accepts no liability for any errors, inaccuracies or possible lack of information in this document.