

CC-G

CC-G, Isolation transducer

Code: M25610. **DESCATALOGADO**

> Output type: 1

> Analog output: 0...20mA

> Measure: 500 µA ... 10 Adc

Description

The **CC-G** transducers, convert D.C current to D.C process indicator signal, and it can be used for galvanic separation between the input and output circuits.

The analog output is directly proportional to the input signal.

Creation date: 23/11/2026 - CIRCUTOR, SAU reserves the right to make technical changes or modify the content/images of this document without prior notice, in order to improve its reliability, functionality, design or for other reasons.
It accepts no liability for any errors, inaccuracies or possible lack of information in this document.



CC-G

D.C. Current transducer

Code: M25610.

Specifications

AC power supply, insulation

Pulse test (kV)	4 kV (1,2/50µs)
Test voltage (kV)	3 kV RMS 50 Hz 1min

AC power supply

Consumption	2,5 VA
Frequency	40...90 Hz
Nominal voltage	24/115/230/400 Vca (-15...+20 %)

Mechanical characteristics

Size (mm) width x height x depth	40 x 72 x 110 (mm)
Weight (kg)	0,29

Environmental characteristics

Protection class	IP 20 (Terminals) IP 40 (case)
Storage temperature	-40....+70 °C
Working temperature	-10...+55 °C

Current measurement circuit

Nominal current (In)	500 µA ... 10 A
Phase current measurement	0...120 % In
Allowable overload	300 % In permanent
Maximum current	15 A

Standards

Electrical safety, Maximum height (m)	2000
Standards	IEC 529, IEC 688, IEC 801, EN 50081-2, EN 50082-2, IEC 1010

Analogue inputs

Load impedance in current	< 500 Ω
Ripple (effective RMS value)	< 0,5 %
Load impedance in voltage	> 500 Ω
Response time	< 100 ms (0...99 % Vn)

Analogue outputs

Current mode, nominal range	0...10, 20 mAac
Displaced output	0,2...2 V / 2...10 V / 4...20 mA
Voltage mode: nominal output range	0...5, 10 Vac



CC-G

D.C. Current transducer

Code: M25610.

Measurement accuracy

Phase current measurement	0,2 % FS

Creation date: 23/11/2026 - CIRCUTOR, SAU reserves the right to make technical changes or modify the content/images of this document without prior notice, in order to improve its reliability, functionality, design or for other reasons.
It accepts no liability for any errors, inaccuracies or possible lack of information in this document.



CC-G

D.C. Current transducer

Code: M25610.

Dimensions

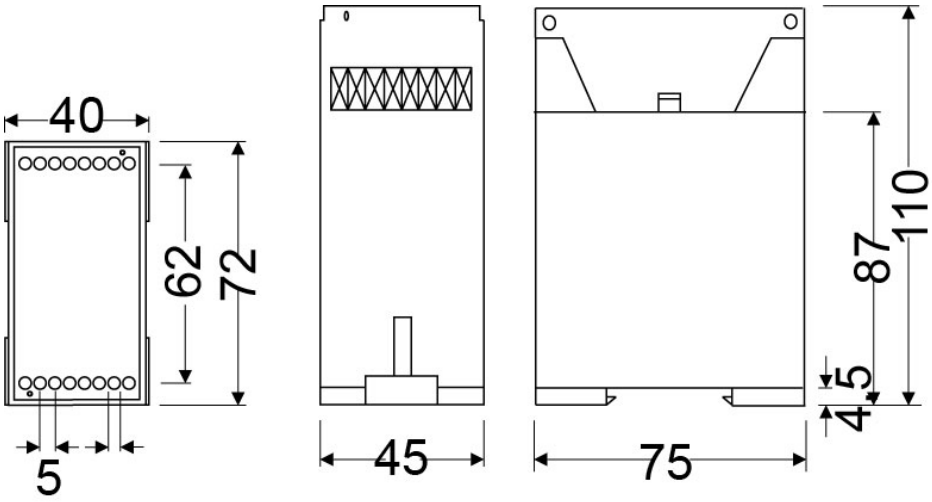

Creation date: 23/11/2026 - CIRCUTOR, SAU reserves the right to make technical changes or modify the content/images of this document without prior notice, in order to improve its reliability, functionality, design or for other reasons.
It accepts no liability for any errors, inaccuracies or possible lack of information in this document.