

CC-A Out2

CC-A Out2, Transducer Aac

Code: M25132.

> Output type: 2
> Analog output: 4...20mA
> Measure: 5 Aac
> Paramètre: A ~

Description

CC-A transducers, convert A.C current to D.C process indicator signal.
The analog output is directly proportional to the input signal, calibrated as a RMS with sinus signal of 50 Hz.



CC-A Out2

AC Current transducer

Code: M25132.

Specifications

AC power supply, insulation

Pulse test (kV)	4 kV (1,2/50µs)
Test voltage (kV)	3 kV RMS 50 Hz 1min

AC power supply

Consumption	2,5 VA
Frequency	40...90 Hz
Nominal voltage	115/230/400 Vca (-15...+20 %)

Mechanical characteristics

Size (mm) width x height x depth	45 x 75 x 110 (mm)
Weight (kg)	0,299

Environmental characteristics

Protection class	IP 20 (Terminals) IP 40 (case)
Storage temperature	-40....+70 °C
Working temperature	-10...+55 °C

Current measurement circuit

Consumption	0,2 VA
Nominal current (In)	1 A / 5 A
Phase current measurement	0...150 % In
Allowable overload	300 % In permanent

Voltage measurement circuit

Frequency measuring range	45...65 Hz

Standards

Electrical safety, Maximum height (m)	2000
Standards	IEC 529, IEC 688, IEC 801, EN 50081-2, EN 50082-2, IEC 1010

Analogue inputs

Load impedance in current	< 500 Ω
Ripple (effective RMS value)	< 0,5 %
Load impedance in voltage	> 500 Ω
Response time	< 300 ms (0...99 % Vn)

Analogue outputs

Current mode, nominal range	0...20 mA

Creation date: 24/11/2026 - CIRCUTOR, SAU reserves the right to make technical changes or modify the content/images of this document without prior notice, in order to improve its reliability, functionality, design or for other reasons.
It accepts no liability for any errors, inaccuracies or possible lack of information in this document.



CC-A Out2

AC Current transducer

Code: M25132.

Displaced output	0,2...2 V / 2...10 V / 4...20 mA
Voltage mode: nominal output range	0...5, 10 Vac

Measurement accuracy

Phase current measurement	0,2 % FS

CC-A
AC Current transducer

CODE	TYPE	Output type	Analog output	Measure	Paramètre
AC Current. Accuracy: ± 0,2 % reading, 40...90 Hz					
M25131.	CC-A Out1	1	0...20mA	5 Aac	A ~
M25132.	CC-A Out2	2	4...20mA	5 Aac	A ~

-AP type: Accuracy: ± 0,5 % reading, 40...90 Hz. External auxiliary supply not required. Specify: Zero value, full scale and output type.
For other values, see coding table on following pages

Creation date: 24/11/2026 - CIRCUTOR, SAU reserves the right to make technical changes or modify the content/images of this document without prior notice, in order to improve its reliability, functionality, design or for other reasons.
It accepts no liability for any errors, inaccuracies or possible lack of information in this document.



CC-A Out2

AC Current transducer

Code: M25132.

Dimensions

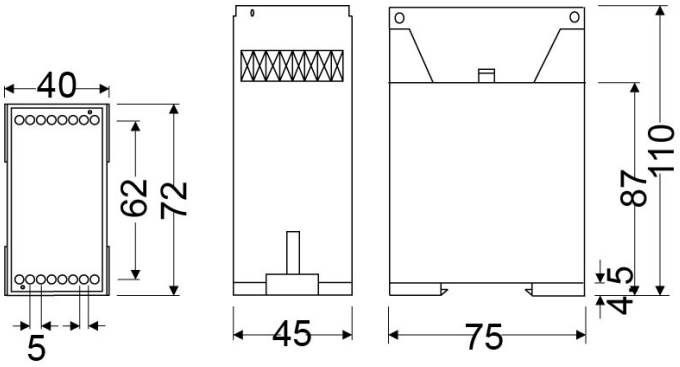

Connections

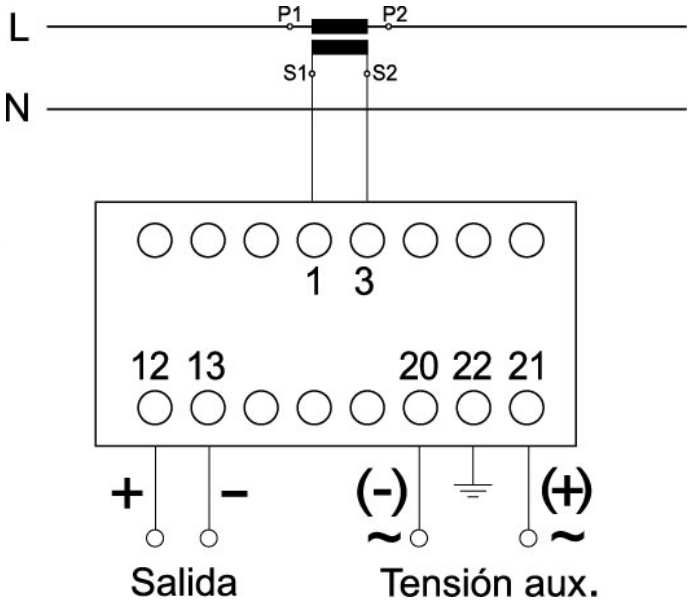

Creation date: 24/11/2026 - CIRCUTOR, SAU reserves the right to make technical changes or modify the content/images of this document without prior notice, in order to improve its reliability, functionality, design or for other reasons.
It accepts no liability for any errors, inaccuracies or possible lack of information in this document.