

CCE-A

CCE-A, Transducer Aac

Code: M25111.

> Output type: 2
> Analog output: 4...20mA
> Measure: 5 A
> Paramètre: A ~

Description

The **CCE-A** and **CCE-AP** transducers, convert A.C current to D.C process indicator signal.

The analog output is directly proportional to the input signal, calibrated as a RMS with sinus signal of 50Hz.

Creation date: 25/11/2026 - CIRCUTOR, SAU reserves the right to make technical changes or modify the content/images of this document without prior notice, in order to improve its reliability, functionality, design or for other reasons.
It accepts no liability for any errors, inaccuracies or possible lack of information in this document.



CCE-A

Narrow section AC Current transducer

Code: M25111.

Specifications

AC power supply, insulation

Pulse test (kV)	4 kV (1,2/50µs)
Test voltage (kV)	3 kV RMS 50 Hz 1min

AC power supply

Consumption	2,5 VA
Frequency	40...90 Hz
Nominal voltage	115/230 Vca (-10...+10 %)

Mechanical characteristics

Size (mm) width x height x depth	20 x 70 x 110 (mm)
Weight (kg)	0,147

Environmental characteristics

Protection class	IP 20 (Terminals) IP 40 (case)
Storage temperature	-40....+70 °C
Working temperature	-10...+60 °C

Current measurement circuit

Consumption	0,2 VA
Nominal frequency	45/65 Hz
Nominal current (In)	1 A / 5 A
Phase current measurement	5...120 % In
Allowable overload	300 % In permanent

Standards

Electrical safety, Maximum height (m)	2000
Standards	IEC 529, IEC 688, IEC 801, EN 50081-1, EN 50082-1, IEC 1010

Analogue inputs

Load impedance in current	< 500 Ω
Ripple (effective RMS value)	< 2 %
Load impedance in voltage	> 500 Ω
Response time	< 300 ms (0...99 % Vn)

Analogue outputs

Displaced output	0,2...2 V / 2...10 V / 4...20 mA



CCE-A

Narrow section AC Current transducer

Code: M25111.

Measurement accuracy

Phase current measurement	0,5 % FS

Creation date: 25/11/2026 - CIRCUTOR, SAU reserves the right to make technical changes or modify the content/images of this document without prior notice, in order to improve its reliability, functionality, design or for other reasons.
It accepts no liability for any errors, inaccuracies or possible lack of information in this document.



CCE-A

Narrow section AC Current transducer

Code: M25111.

CCE
Narrow section AC Current transducer

CODE	TYPE	Output type	Analog output	System	Measure	Paramètre
AC Current transducer						
M25111.	CCE-A	2	4...20mA	-	5 A	A ~

Specify ACCORDING TO THE CODE TABLE: 1. Code / 2. Input range / 3. Output range / 4. Auxiliary power supply / 5. Specify the network voltage for CFE-AP. xxx-AP types external auxiliary supply not required. 4...20 mA output not possible.

For other values, see coding table on following pages

Creation date: 25/11/2026 - CIRCUTOR, SAU reserves the right to make technical changes or modify the content/images of this document without prior notice, in order to improve its reliability, functionality, design or for other reasons.
It accepts no liability for any errors, inaccuracies or possible lack of information in this document.



CCE-A

Narrow section AC Current transducer

Code: M25111.

Dimensions

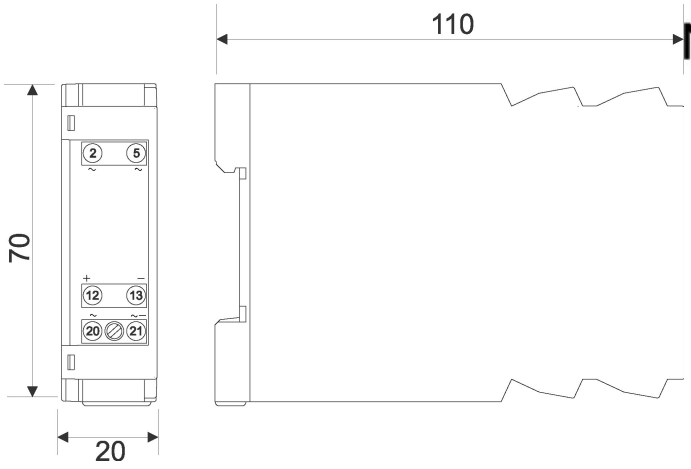

Connections

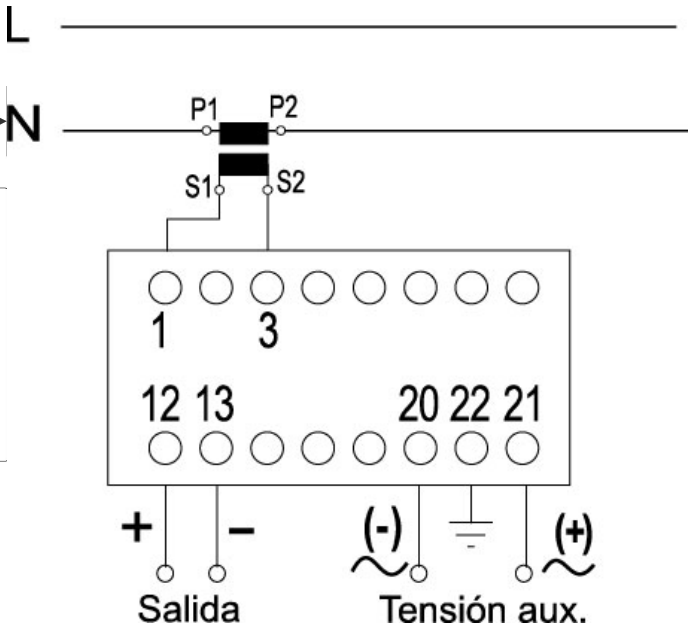

Creation date: 25/11/2026 - CIRCUTOR, SAU reserves the right to make technical changes or modify the content/images of this document without prior notice, in order to improve its reliability, functionality, design or for other reasons.
It accepts no liability for any errors, inaccuracies or possible lack of information in this document.