

CV-A-RMS Out1

CV-A-RMS Out1, Transducer Vac

Code: M25051.

> Output type: 1
> Analog output: 0...20mA
> Measure: 300 Vac
> Paramètre: V ~

Description

The **CV-A** transducers, convert A.C voltage to D.C process indicator signal.
The analog output is directly proportional to the input signal, calibrated as a RMS with sinus signal of 50 Hz.

Creation date: 23/11/2026 - CIRCUTOR, SAU reserves the right to make technical changes or modify the content/images of this document without prior notice, in order to improve its reliability, functionality, design or for other reasons.
It accepts no liability for any errors, inaccuracies or possible lack of information in this document.



CV-A-RMS Out1

A.C. Voltage transducer

Code: M25051.

Specifications

AC power supply, insulation

Pulse test (kV)	4 kV (1,2/50µs)
Test voltage (kV)	3 kV RMS 50 Hz 1min

AC power supply

Consumption	2,5 VA
Frequency	40...90 Hz
Nominal voltage	24/115/230/400 Vca (-15...+20%)

Mechanical characteristics

Size (mm) width x height x depth	40 x 72 x 110 (mm)
Weight (kg)	0,31

Environmental characteristics

Protection class	IP 20 (Terminals) IP 40 (case)
Storage temperature	-40....+70 °C
Working temperature	-10...+55 °C

Voltage measurement circuit

Input impedance	3000 Ω/V
Frequency measuring range	45...65 Hz
Voltage measuring range	0...150 % Vn
Nominal voltage	0...300 Vca
Maximum permanent measurement voltage	1000 V

Standards

Electrical safety, Maximum height (m)	2000
Standards	IEC 529, IEC 688, IEC 801, EN 50081-2, EN 50082-2, IEC 1010

Analogue inputs

Load impedance in current	< 500 Ω
Ripple (effective RMS value)	< 0,5 %
Load impedance in voltage	> 500 Ω
Response time	< 300 ms (0...99 % Vn)

Analogue outputs

Current mode, nominal range	0...20 mA
Displaced output	0,2...2 V / 2...10 V / 4...20 mA
Voltage mode: nominal output range	0...5, 10 Vac



CV-A-RMS Out1

A.C. Voltage transducer

Code: M25051.

Measurement accuracy

Phase current measurement	0,2 % FS

CV-A
AC Transducer Voltage

CODE	TYPE	Output type	Analog output	Measure	Paramètre
AC Voltage. Accuracy: ± 0,2 % reading, 40...90 Hz					
M25032.	CV-A Out2	2	4...20mA	300 Vac	V ~
M25051.	CV-A-RMS Out1	1	0...20mA	300 Vac	V ~

-AP type: Accuracy: ± 0,5 % reading, 40...90 Hz. External auxiliary supply not required. Specify: Zero value, full scale and output type.
For other values, see coding table on following pages

Creation date: 23/11/2026 - CIRCUTOR, SAU reserves the right to make technical changes or modify the content/images of this document without prior notice, in order to improve its reliability, functionality, design or for other reasons.
It accepts no liability for any errors, inaccuracies or possible lack of information in this document.



CV-A-RMS Out1

A.C. Voltage transducer

Code: M25051.

Dimensions

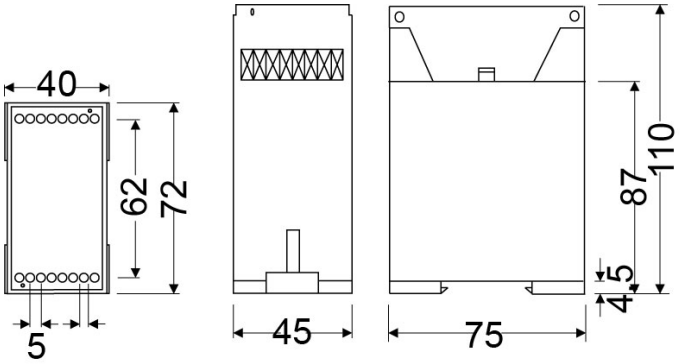

Connections

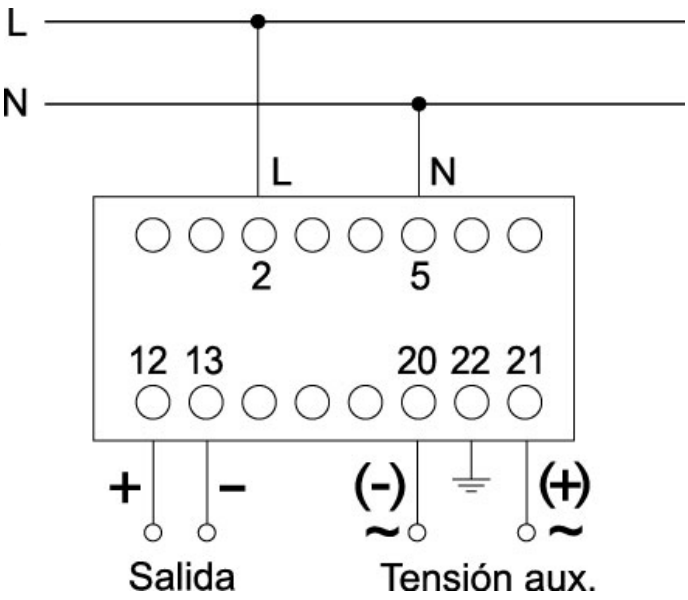

Creation date: 23/11/2026 - CIRCUTOR, SAU reserves the right to make technical changes or modify the content/images of this document without prior notice, in order to improve its reliability, functionality, design or for other reasons.
It accepts no liability for any errors, inaccuracies or possible lack of information in this document.