

DHC-96 Aac

DHC-96 Aac, digital ammeter, 96 x 48, 2 output relays

Code: M22358.

> Protocol: Modbus RTU
> Scale: 1 A~ / 5 A~
> IP: 54
> Communications: RS-485
> N° relays: 2
> Digital inputs: 2
> Analog output: 1 (20 mA)
> System: AC
> Parameter: A ~
> Mounting: Pannel
> Modules: 96 x 48

Description

Panel-mounted digital instruments that display the value of an electrical variable measured or proportional value of a process signal on its screen (depending on the model). Designed to supervise, regulate and control units with the use of relay outputs that are built in the unit.

The **DHC-96** series displays the value of an electrical variable measured or proportional value of a process signal on its screen (depending on the model). The unit displays the electrical parameters of a single-phase installation, depending on the model, such as the voltage, current, etc. In DC systems, the unit can measure the voltage, current, frequency and other variables associated with industrial processes. The AC models take the measurements in true RMS (TRMS).

All models in this range have the following features:

- Universal power supply at 80...270 $V_{ac/dc}$ (DHC-96-CPM: 100...270 Vac/dc) and optional power supply at 16 ... 36 V_{dc} (DHC-96-CPM: 20...60 Vdc)
- IP 54 protection degree on the front panel
- High measurement accuracy
- Programmable measuring input
- Alarm delays and interlockings
- Galvanic insulation between external circuits
- Self-configurable decimal point
- Installed on 96 x 49 mm panels

Application

These digital instruments have many different applications and can be used in:

- Industrial applications
- Air conditioning units
- Solar photovoltaic energy installations
- Industrial process control systems

Creation date: 24/11/2026 - CIRCUTOR, SAU reserves the right to make technical changes or modify the content/images of this document without prior notice, in order to improve its reliability, functionality, design or for other reasons.
It accepts no liability for any errors, inaccuracies or possible lack of information in this document.



DHC-96 Aac

Panel-mounted digital instruments

Code: M22358.

Specifications

AC power supply

Installation category	CAT III 300V
Consumption	2.6 ... 4.9 VA
Frequency	50/60 Hz
Nominal voltage	80...270 V ~

DC power supply

Installation category	CAT III 300 V
Consumption	1.5 ... 1.6 W
Nominal voltage	80...270 Vdc

Mechanical characteristics

Size (mm) width x height x depth	96 x 49 x 89.2 (mm)
Envelope	Polycarbonate + ABS
Weight (kg)	0,2

Environmental characteristics

Protection class	Frontal: IP54, Rear: IP20
Relative humidity (without condensation)	≤ 95 %
Storage temperature	-40 ... +85 °C
Working temperature	-40 ... +70 °C

Current measurement circuit

Installation category	CAT III 300 V
Consumption	< 0.2 VA
Nominal current (In)	1 A / 5 A ~
Allowable overload	1.2 In continuous, 10 In instantaneous(5s)

Standards

Electrical safety, Maximum height (m)	2000
Electrical safety, Installation category	CAT III 300 V
Standards	IEC 61010-1, IEC 61000-4-2, IEC 61000-4-3, IEC 61000-4-4, IEC 61000-4-5, IEC 61000-4-6, IEC 61000-4-8, IEC 61000-4-11

User interface

Keyboard	4 keys
Display type	LCD 5 digits

Digital inputs



DHC-96 Aac

Panel-mounted digital instruments

Code: M22358.

Input/output insulation	2000 V ~
Quantity	2
Type	Potential-free contact
Maximum short-circuit current	3.3 mA dc
Maximum open circuit voltage	17 Vdc

Analogue outputs

Quantity	1
Linearity	0.5 %
Current mode, nominal range	0 ... 20 mA, 4 ... 20 mA, 4-12-20 mA
Current mode: maximum load resistance	350 Ω
Maximum internal voltage	17 V dc

Digital relay outputs

Quantity	2
Resistive load (max.)	250 Vca / 5 Aca, 30 Vcc / 5 Acc
Maximum current	5 A ~
Maximum open contact voltage	277 V ~
Electrical life	1×10^5
Maximum switching capacity	1385 VA

Measurement accuracy

Phase current measurement	0.5 %

Serial communication

Protocol	ModBus RTU
Technology / Type	RS-485

DHC-96

Digital instruments 96 x 48 with analogue output

CODE	TYPE	Protocol	Scale	Communications	N° relays	Analog output	System	Paramètre	Modules	Measure	Power supply (Vac)
Voltmeters											
M22318.	DHC-96 Vac	Modbus RTU	63,5 V / 100 V / 110 V /230 V /380 V /480 V	RS-485	2	1 (20 mA)	AC	V ~	96 x 48		
M22388.	DHC-96 Vdc	Modbus RTU	± 10 Vdc / ± 24 Vdc / ± 48 Vdc	RS-485	2	1 (20 mA)	DC	Vdc	96 x 48	± 10 Vdc / ± 24 Vdc / ± 48 Vdc	80 ... 270 Vac/Vdc
M22338.	DHC-96 HVdc	Modbus RTU	± 1500 V	RS-485	2	1 (20 mA)	DC	Vdc	96 x 48		
Ammeters											



DHC-96 Aac

Panel-mounted digital instruments

Code: M22358.

CODE	TYPE	Protocol	Scale	Communications	N° relays	Analog output	System	Paramètre	Modules	Measure	Power supply (Vac)
M22348.	DHC-96 mVdc	Modbus RTU	60 mV / 75 mV / 100 mV / 150 mV / 200 mV	RS-485	2	1 (20 mA)	DC	V dc	96 x 48		
M22358.	DHC-96 Aac	Modbus RTU	1 A~ / 5 A~	RS-485	2	1 (20 mA)	AC	A ~	96 x 48		
Process indicators											
M22368.	DHC-96 mAdc	Modbus RTU	-20 ... +20 mA / 0...20 mA / 4...20 mA	RS-485	2	1 (20 mA)	DC	mAdc	96 x 48		

Option of 0/2... 10 VDC outputs on demand

Creation date: 24/11/2026 - CIRCUTOR, SAU reserves the right to make technical changes or modify the content/images of this document without prior notice, in order to improve its reliability, functionality, design or for other reasons.
It accepts no liability for any errors, inaccuracies or possible lack of information in this document.



DHC-96 Aac

Panel-mounted digital instruments

Code: M22358.

Dimensions

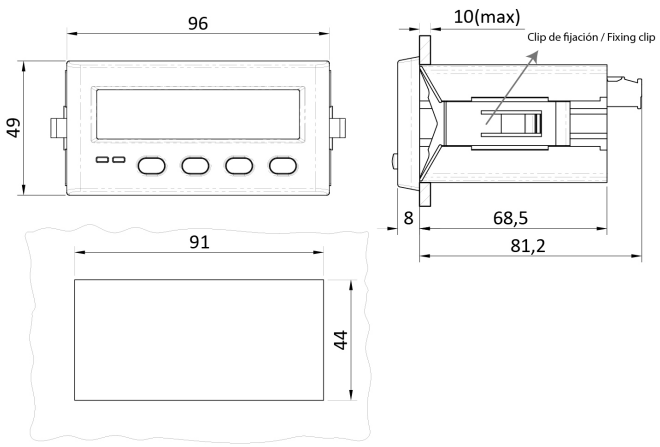

Connections

