

DCB-72 HVdc

DCB-72 HVdc, digital voltmeter, 72 x 72

Code: M22230.

> Scale: ± 1500 V
> N° relays: -
> System: DC
> Mounting: Pannel
> Modules: 72 x 72

Description

Panel-mounted digital instruments that display the value of an electrical variable measured or proportional value of a process signal on its screen (depending on the model). Designed to supervise, regulate and control units with the use of relay outputs that are built in the unit.

The **DCB** series displays the value of an electrical variable measured or proportional value of a process signal on its screen (depending on the model). The unit displays the electrical parameters of a single-phase installation, depending on the model, such as the voltage, current, etc. In DC systems, the unit can measure the voltage, current, frequency and other variables associated with industrial processes. The AC models take the measurements in true RMS (TRMS).

All models in this range have the following features:

- Universal power supply at 80 ... 270 $V_{ac/dc}$ and optional power supply at 24 V_{dc}
- IP 54 protection degree on the front panel
- High measurement accuracy
- Programmable measuring input
- Alarm delays and interlockings
- Galvanic insulation between external circuits
- Self-configurable decimal point
- Can be installed on 48 x 48 or 72 x 72 mm panels, depending on the model

Application

These digital instruments have many different applications and can be used in:

- Industrial applications
- Air conditioning units
- Solar photovoltaic energy installations
- Industrial process control systems



DCB-72 HVdc

Panel-mounted digital instruments

Code: M22230.

Specifications

AC power supply

Installation category	CAT III 300 V
Consumption	1.2 ... 3.5 VA
Frequency	50/60 Hz
Nominal voltage	80...270 V ~

DC power supply

Installation category	CAT III 300 V
Consumption	0.6 ... 0.7 W
Nominal voltage	80...270 Vdc

Environmental characteristics

Protection class	Front: IP54, Rear: IP20
Relative humidity (without condensation)	≤ 95 %
Storage temperature	-40 ... +85 °C
Working temperature	-40 ... +70 ° C

Mechanical characteristics

Envelope	Polycarbonate + ABS
Weight (kg)	0,18

Voltage measurement circuit

Installation category	CAT III 300 V
Consumption	< 0.1 VA
Input impedance	> 5 MΩ
Nominal voltage	± 1500 V dc
Maximum permanent measurement voltage	1.2 Un continous, 2 Un instantaneous (1 min)

Standards

Electrical safety, Maximum height (m)	2000
Electrical safety, Installation category	CAT III 300 V
Electrical safety, Contamination level/class	Pollution resistance 2
Standards	IEC 61010-1, IEC 61000-4-2, IEC 61000-4-3, IEC 61000-4-4, IEC 61000-4-5, IEC 61000-4-6, IEC 61000-4-8, IEC 61000-4-11

User interface

Keyboard	4 keys
Display type	LED 5 digits

Creation date: 23/11/2026 - CIRCUTOR, SAU reserves the right to make technical changes or modify the content/images of this document without prior notice, in order to improve its reliability, functionality, design or for other reasons.
It accepts no liability for any errors, inaccuracies or possible lack of information in this document.



DCB-72 HVdc

Panel-mounted digital instruments

Code: M22230.

Measurement accuracy

Phase voltage measurement	0.5 %

DCB
Digital instrument

CODE	TYPE	Scale	N° relays	System	Modules
Voltmeters					
M22212.	DCB-72 Vac-2OR	63,5 V / 100 V / 110 V /230 V /380 V /480 V	2	AC	72 x 72
M22230.	DCB-72 HVdc	± 1500 V	-	DC	72 x 72
Ammeters					
M22252.	DCB-72 Aac-2OR	1 A / 5 A	2	AC	72 x 72

Creation date: 23/11/2026 - CIRCUTOR, SAU reserves the right to make technical changes or modify the content/images of this document without prior notice, in order to improve its reliability, functionality, design or for other reasons.
It accepts no liability for any errors, inaccuracies or possible lack of information in this document.



DCB-72 HVdc

Panel-mounted digital instruments

Code: M22230.

Dimensions

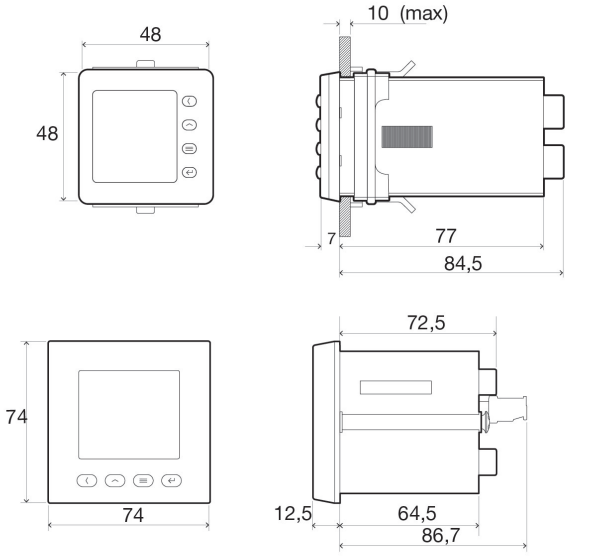

Units: mm

Connections

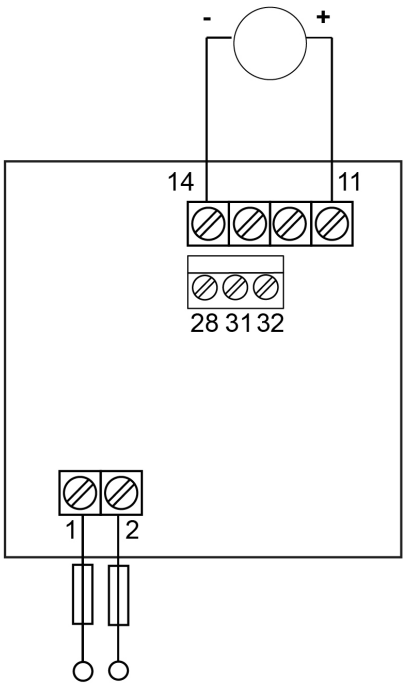

Alimentación Auxiliar
Power Supply

Creation date: 23/11/2026 - CIRCUTOR, SAU reserves the right to make technical changes or modify the content/images of this document without prior notice, in order to improve its reliability, functionality, design or for other reasons.
It accepts no liability for any errors, inaccuracies or possible lack of information in this document.