

SYNCHROMAX-PID 110...600V

SYNCHROMAX-PID 110...600V, Sincro equipment

Code: M14635.

> PID control: Yes
> Measurement Range (V): 110...600
> Frequency (Hz): 35...80

Description

- All parameters can be programmed on the keyboard on the front panel.
- Digital unit with 4-digit display and 30 auxiliary LEDs.
- Voltage, generator frequency and network measurement and display (TRMS), including the unbalance between the generator and the network.
- Automatic synchronisation by simply programming the contactor closing time.
- Wide range of frequencies (35...80 Hz)
- Standard power supply: 110, 230 and 400 V ac
- 2 operating modes: Manual, automatic and assisted
- Digital adjustment (without potentiometers)
- PI / PID CONTROL (depending on the type) of the speed of the generator with built-in pulse output
- Protection with password.

CIRCUTOR has two types of synchronism relays: SYNCHRO MAX and SYNCHRO MAX PID.

Synchro Max

Synchro Max is capable of adapting the generator's frequency with an integrated PI regulation algorithm, in order to connect it in parallel to the electrical network. In addition, it can be used to measure and display the voltage, phase and frequency parameters of the generator and network, as well as its differences.

Synchro Max PID

Synchro Max PID offers excellent standard Synchro Max measurement, display and programming features, with a powerful PID algorithm to control the generator's frequency. This type of control turns Synchro Max PID into a quick synchronisation device and, therefore, it offers the ideal solution to reduce synchronisation costs, since it minimises the time invested in such procedures. This type of control is perfect for small-scale hydraulic power plants, among many other applications. Here is an example of how SYNCHRO MAX moves forward to a time tbrk (previously programmed by the user) to take into account the connection delay of the generator's contactor.

Application

The SynchroMax is a synchronization relay which synchronizes the generator with either the network or with another generator, taken as a reference. This allows both services to be connected, in parallel, in emergency or support applications when it is necessary to provide more power.

Creation date: 23/11/2026 - CIRCUTOR, SAU reserves the right to make technical changes or modify the content/images of this document without prior notice, in order to improve its reliability, functionality, design or for other reasons.
It accepts no liability for any errors, inaccuracies or possible lack of information in this document.



SYNCHROMAX-PID 110...600V

Synchronization and marine applications equipment

Code: M14635.

Specifications

AC power supply

Consumption	3 ... 10 VA
Frequency	35 ... 450 Hz
Nominal voltage	400 Vca (-10 ... + 15 %)

DC power supply

Consumption	1 ... 1.5 W

Mechanical characteristics

Size (mm) width x height x depth	96 x 96 x 62.9 (mm)
Envelope	Self-extinguishing ABS
Fastening	Panel
Weight (kg)	0,509

Environmental characteristics

Protection class	IP 54 (Front), optional IP 65
Storage temperature	-40 ... +70 °C
Working temperature	-10 ... +65 °C

Current measurement circuit

Consumption	< 500 µA

Voltage measurement circuit

Sampling frequency	35 ... 80 Hz
Frequency measuring range	35 ... 80 Hz
Voltage measuring range	35 ... 80 Hz
Nominal voltage	400 (Ph-N), 565 (Ph-Ph)
Maximum permanent measurement voltage	800 Vac

Standards

Electrical safety, Maximum height (m)	2000
Standards	IEC 61010, IEC 348, IEC 664, IEC 801, UNE-EN 50081-2, UNE-EN 50082-2

User interface

Display format	Red, high efficiency
LED	30 LED auxiliaries
Resolution of the display	4 digits
Presentation cycle	2 / s



SYNCHROMAX-PID 110...600V

Synchronization and marine applications equipment

Code: M14635.

Measurement accuracy

Phase angle φ	± 0,5 °
Frequency measurement	± 0,01 Hz
Phase voltage measurement	Cl 1 ±2 digit

SYNCHROMAX
Synchronization equipment

CODE	TYPE	Frequency (Hz)
Power Supply 400 V		
M14624.	SYNCHROMAX 30....150V	35...80
M14625.	SYNCHROMAX 110...600V	35...80
M14634.	SYNCHROMAX-PID 30...150V	35...80
M14635.	SYNCHROMAX-PID 110...600V	35...80

Creation date: 23/11/2026 - CIRCUTOR, SAU reserves the right to make technical changes or modify the content/images of this document without prior notice, in order to improve its reliability, functionality, design or for other reasons.
It accepts no liability for any errors, inaccuracies or possible lack of information in this document.



SYNCHROMAX-PID 110...600V

Synchronization and marine applications equipment

Code: M14635.

Connections

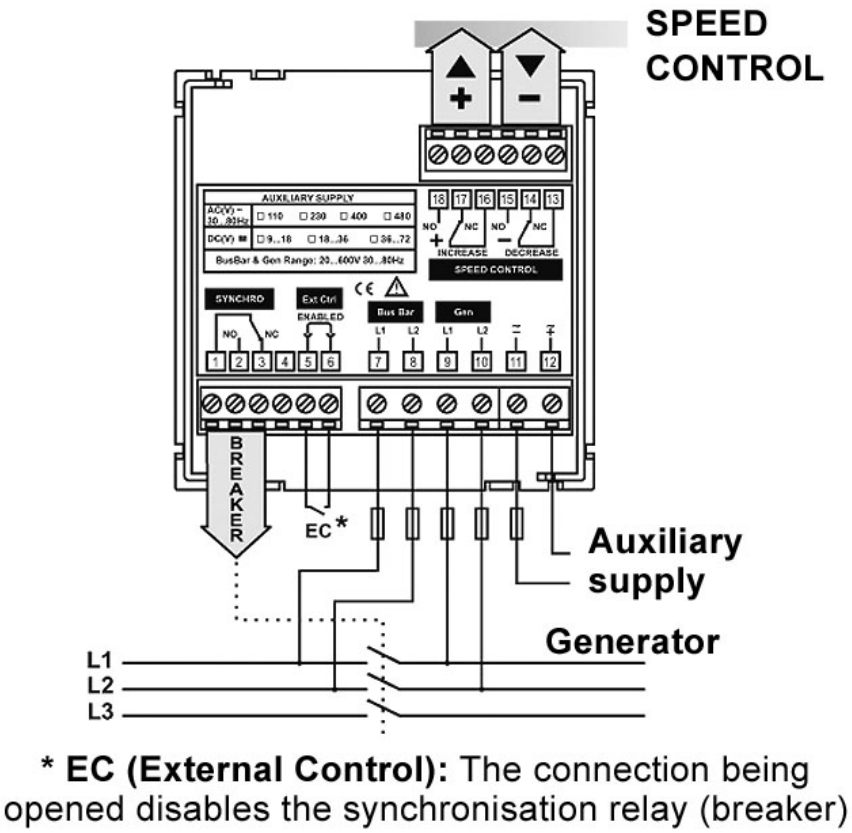

*** EC (External Control):** The connection being opened disables the synchronisation relay (breaker)

Creation date: 23/11/2026 - CIRCUTOR, SAU reserves the right to make technical changes or modify the content/images of this document without prior notice, in order to improve its reliability, functionality, design or for other reasons.
It accepts no liability for any errors, inaccuracies or possible lack of information in this document.