

2EC144 2x.../100V

2EC144 2x.../100V, Voltmeter

Code: M13841.

> Scale: 90°
> Accuracy: 1,5
> Measurement Range (V): 2x.../100
> Device: 2EC144
> Modules: 144x144

Description

- Does not need an auxiliary power supply
- DIN box with dimensions 96 and 144 mm
- Class 1.5
- Double scale

Application

For the measurement and comparison of alternating currents from two generators or a generator in the network, when connected in parallel.

Creation date: 23/11/2026 - CIRCUTOR, SAU reserves the right to make technical changes or modify the content/images of this document without prior notice, in order to improve its reliability, functionality, design or for other reasons.
It accepts no liability for any errors, inaccuracies or possible lack of information in this document.



2EC144 2x.../100V

Voltmeter, marine applications equipment

Code: M13841.

Specifications

Mechanical characteristics

Size (mm) width x height x depth	144 x 144 x 71.8 (mm)
Fastening	Panel
Weight (kg)	0,43

Environmental characteristics

Protection class	Panel: IP 52 (Front), IP 00 (Terminals)
Storage temperature	-25 ... +40 °C
Working temperature	+10 ... +30 °C

Standards

Certifications	CE
Standards	BS 89, UNE-EN 60051, IEC 144, DIN 43780, IEC 51, UNE 21318

Voltage measurement circuit

Consumption	1 ... 4 VA
Sampling frequency	20 ... 100 Hz
Nominal voltage	230 V ~
Maximum permanent measurement voltage	1,2 Vn permanent rated voltage / 2 Vn during 5s

Electrical characteristics

Insulation voltage, circuit	2kV a 50 Hz < 1min entre mecanismo y caja

Measurement accuracy

Accuracy	1,5 % FE

2EC
Double voltimeters

CODE	TYPE	Scale	Accuracy	Modules	Device
M13831.	2EC96 2x.../100V	90°	1,5	96x96	2EC96
M13832.	2EC96 2x.../110V	90°	1,5	96x96	2EC96
M13833.	2EC96 2x220V	90°	1,5	96x96	2EC96
M13834.	2EC96 2x380V	90°	1,5	96x96	2EC96
M13835.	2EC96 2x440V	90°	1,5	96x96	2EC96
M13841.	2EC144 2x.../100V	90°	1,5	144x144	2EC144
M13844.	2EC144 2x380V	90°	1,5	144x144	2EC144
M13845.	2EC144 2x440V	90°	1,5	144x144	2EC144

Creation date: 23/11/2026 - CIRCUTOR, SAU reserves the right to make technical changes or modify the content/images of this document without prior notice, in order to improve its reliability, functionality, design or for other reasons.
It accepts no liability for any errors, inaccuracies or possible lack of information in this document.



2EC144 2x.../100V

Voltmeter, marine applications equipment

Code: M13841.

Indicate the voltage transformer ratio

Creation date: 23/11/2026 - CIRCUTOR, SAU reserves the right to make technical changes or modify the content/images of this document without prior notice, in order to improve its reliability, functionality, design or for other reasons.
It accepts no liability for any errors, inaccuracies or possible lack of information in this document.



2EC144 2x.../100V

Voltmeter, marine applications equipment

Code: M13841.

Dimensions

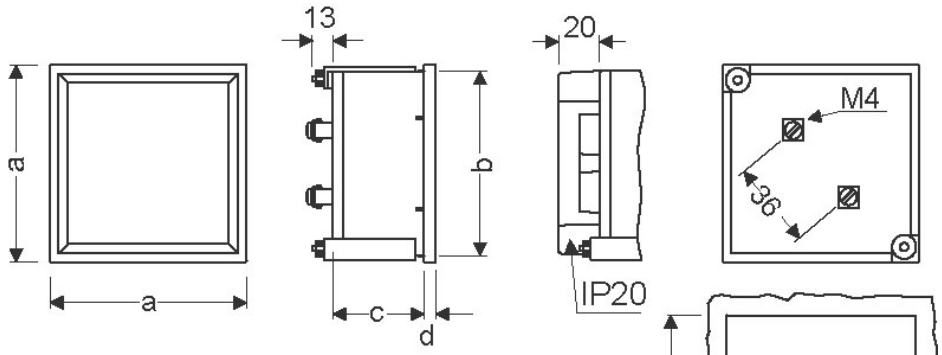

	a	b	c	d	e
96	96	91	43,5	5,7	$92^{+0,8}$
144	144	137	64,5	7,3	138^{+1}

Creation date: 23/11/2026 - CIRCUTOR, SAU reserves the right to make technical changes or modify the content/images of this document without prior notice, in order to improve its reliability, functionality, design or for other reasons.
It accepts no liability for any errors, inaccuracies or possible lack of information in this document.