

PIC96B 400 V

PIC96B 400 V, Phasemeter

Code: M13636. **DESCATALOGADO**

> Scale: 360°, P1
> System: Balanced three-phase
> Accuracy: 1,5
> Measurement Range (V): 400
> Modules: 96x96

Description

- Does not need an auxiliary power supply
- DIN box with dimensions 96 and 144.
- Class 1.5
- Balanced and unbalanced single and three-phase circuits.
- 4 quadrants

Application

Measurement of cosφ in balanced or unbalanced single and three-phase circuits.

Creation date: 23/11/2026 - CIRCUTOR, SAU reserves the right to make technical changes or modify the content/images of this document without prior notice, in order to improve its reliability, functionality, design or for other reasons.
It accepts no liability for any errors, inaccuracies or possible lack of information in this document.



PIC96B 400 V

Phasemeters

Code: M13636.

Specifications

Mechanical characteristics

Size (mm) width x height x depth	96 x 96 x 101.2 (mm)
Fastening	Panel
Weight (kg)	1,41

Environmental characteristics

Protection class	Panel: IP 52 (Front), IP 00 (Terminals)
Storage temperature	-25...+40 °C
Working temperature	+10 ... +30 °C

Standards

Certifications	CE, UL
Electrical safety, Maximum height (m)	2000
Standards	BS 89, UNE-EN 60051, IEC 144, UL 94, DIN 43780, IEC 51, UNE 21318

Current measurement circuit

Consumption	4 VA
Sampling frequency	20 ... 100 Hz
Nominal current (In)	... 5 A
Allowable overload	1,2 In permanent / 5 In during 30s / 10 In during 5s / 40 In during 1s

Voltage measurement circuit

Consumption	20 mA
Sampling frequency	49,5 ... 50,5 Hz / 59,4 ... 60,6 Hz

Electrical characteristics

Insulation voltage, circuit	2 kV a 50 Hz <1 min entre mecanismo y caja

Measurement accuracy

Accuracy	± 1,5 % FE

Current range: 0.1 to 1.2 In. For the connection of transformers .../5A.

Creation date: 23/11/2026 - CIRCUTOR, SAU reserves the right to make technical changes or modify the content/images of this document without prior notice, in order to improve its reliability, functionality, design or for other reasons.
It accepts no liability for any errors, inaccuracies or possible lack of information in this document.



PIC96B 400 V

Phasemeters

Code: M13636.

Dimensions

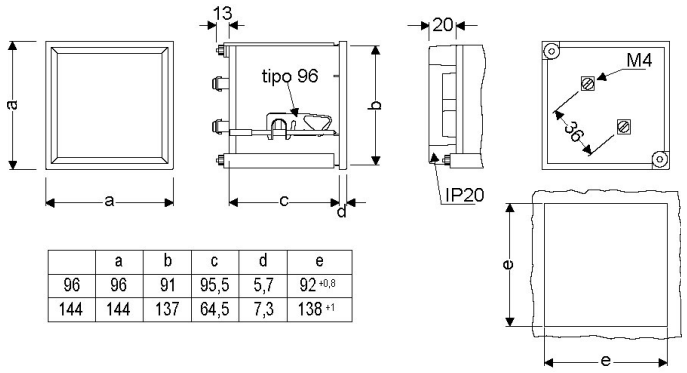

	a	b	c	d	e
96	96	91	95,5	5,7	92 +0,8
144	144	137	64,5	7,3	138 +1

Connections

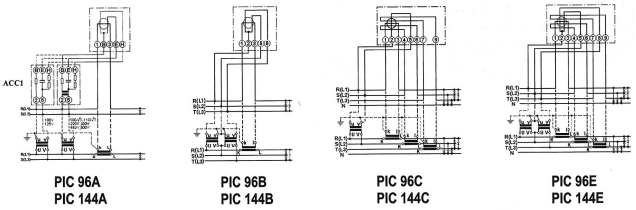

PIC 96A
PIC 144A

PIC 96B
PIC 144B

PIC 96C
PIC 144C

PIC 96E
PIC 144E

Creation date: 23/11/2026 - CIRCUTOR, SAU reserves the right to make technical changes or modify the content/images of this document without prior notice, in order to improve its reliability, functionality, design or for other reasons.
It accepts no liability for any errors, inaccuracies or possible lack of information in this document.