

FEMC96 100V

FEMC96 100V, Phasemeter

Code: M13433. **DESCATALOGADO**

> Scale: 90° P1
> System: Single-phase
> Accuracy: 1,5
> Measurement Range (V): 100
> Modules: 96x96

Description

- Does not need an auxiliary power supply
- DIN box with dimensions 96 and 144 mm
- Class 1.5
- Built-in electronic converter
- Balanced single and three-phase circuits

Application

Measurement of cosφ in balanced or unbalanced single and three-phase circuits.

Creation date: 25/11/2026 - CIRCUTOR, SAU reserves the right to make technical changes or modify the content/images of this document without prior notice, in order to improve its reliability, functionality, design or for other reasons.
It accepts no liability for any errors, inaccuracies or possible lack of information in this document.



FEMC96 100V

Phasemeters

Code: M13433.

Specifications

Mechanical characteristics

Size (mm) width x height x depth	96 x 96 x 62.9 (mm)
Fastening	Panel
Weight (kg)	0,48

Environmental characteristics

Protection class	Panel: IP 52 (Front), IP 00 (Terminals)
Storage temperature	-25...+40 °C
Working temperature	+10 ... +30 °C

Standards

Certifications	CE
Electrical safety, Maximum height (m)	2000
Standards	BS 89, UNE-EN 60051, IEC 144, DIN 43780, IEC 51, UNE 21318

Current measurement circuit

Consumption	1,5 VA
Sampling frequency	20 ... 100 Hz
Nominal current (In)	... 5 A
Allowable overload	1,2 In permanent / 5 In during 30s / 10 In during 5s / 40 In during 1s

Voltage measurement circuit

Consumption	1 VA
Sampling frequency	40 ... 70 Hz
Maximum permanent measurement voltage	1,2 Vn permanent rated voltage / 2 Vn during 5s

Electrical characteristics

Insulation voltage, circuit	2 kV, 50 Hz, 1 min entre mecanismo y caja

Measurement accuracy

Accuracy	± 1,5 % FE

FEMC / FETC
Single phase and three-phase 90° electronic phase-meters

CODE	TYPE	Scale	Accuracy	Modules
Single-phase				
M13434.	FEMC96 110V	90° P1	1,5	96x96



FEMC96 100V

Phasemeters

Code: M13433.

Current range: 0.1 to 1.2 In. For the connection of transformers .../5A. Built-in electronic transducer.

Creation date: 25/11/2026 - CIRCUTOR, SAU reserves the right to make technical changes or modify the content/images of this document without prior notice, in order to improve its reliability, functionality, design or for other reasons.
It accepts no liability for any errors, inaccuracies or possible lack of information in this document.



FEMC96 100V

Phasemeters

Code: M13433.

Dimensions

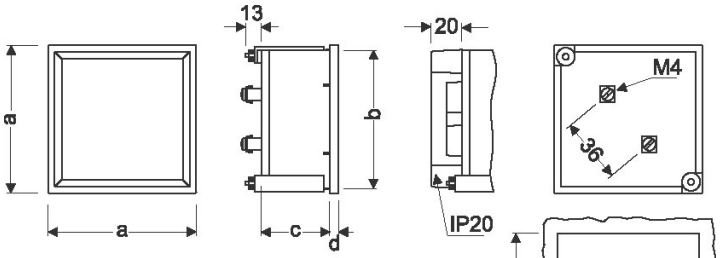

	a	b	c	d	e
96	96	91	57,2	5,7	$92^{+0,8}$
144	144	137	64,5	7,3	138^{+1}

Connections

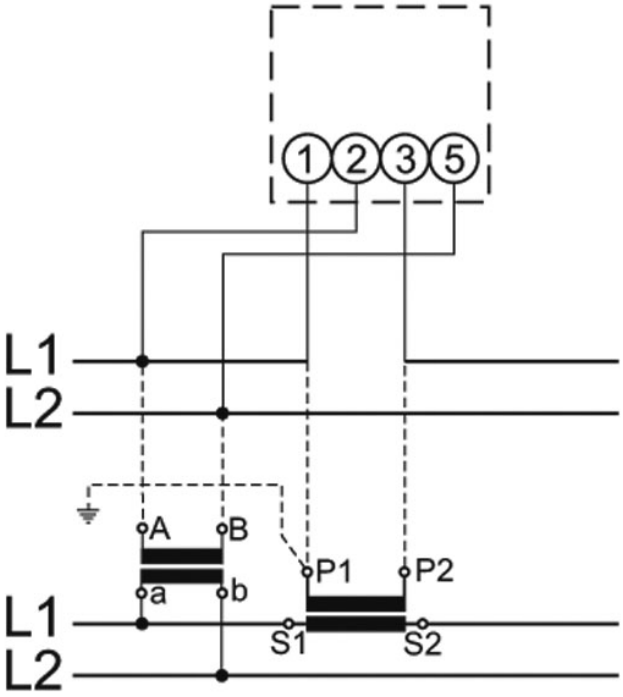

Creation date: 25/11/2026 - CIRCUTOR, SAU reserves the right to make technical changes or modify the content/images of this document without prior notice, in order to improve its reliability, functionality, design or for other reasons.
It accepts no liability for any errors, inaccuracies or possible lack of information in this document.