

WTC96A 110V .../5A

WTC96A 110V .../5A, Vattmeter

Code: M13034.

> Scale: 90° P1
> System: Three-phase 3 wire (ARON)
> Accuracy: 1,5
> Measure: 110 Vph-ph, .../5A
> Device: WTC96A
> Modules: 96x96

Description

- Does not need an auxiliary power supply
- DIN box with dimensions 96 and 144.
- Class 1.5
- Built-in electronic converter
- Balanced and unbalanced single and three-phase circuits.

Application

Measurement of active power in balanced or unbalanced single and three-phase circuits.



WTC96A 110V .../5A

Wattmeters and varmeters

Code: M13034.

Specifications

Mechanical characteristics

Size (mm) width x height x depth	96 x 96 x 62.9 (mm)
Fastening	Panel
Weight (kg)	0,4

WMC / WTC
Single-phase and three-phase wattmeters

CODE	TYPE	Scale	Accuracy	Modules	Device	Measure
Single-phase						
M13031.	WMC96 400V .../5A	90° P1	1,5	96x96	WMC96	400 Vph-ph, .../5 A
M13041.	WMC144 400V .../5A	90° P1	1,5	96x96	WMC144	400 Vph-ph, .../5 A
Balanced three-phase						
M13032.	WTC96E 400V .../5A	90° P1	1,5	96x96	WTC96	400 Vph-ph, .../5 A
Three-phase 3 wire (ARON)						
M13034.	WTC96A 110V .../5A	90° P1	1,5	96x96	WTC96A	110 Vph-ph, .../5A
Three-phase 4 wire						
M13033.	WTC96AN 400V .../5A	90° P1	1,5	96x96	WTC96AN	400 Vph-ph, .../5 A

Exchangeable scales for types WMC 96, WTC 96E and WTC 96AN. Scale not included (*1) Specify primary voltage and current of the measuring transformers, and power at full scale

Creation date: 24/11/2026 - CIRCUTOR, SAU reserves the right to make technical changes or modify the content/images of this document without prior notice, in order to improve its reliability, functionality, design or for other reasons.
It accepts no liability for any errors, inaccuracies or possible lack of information in this document.



WTC96A 110V .../5A

Wattmeters and varmeters

Code: M13034.

Dimensions

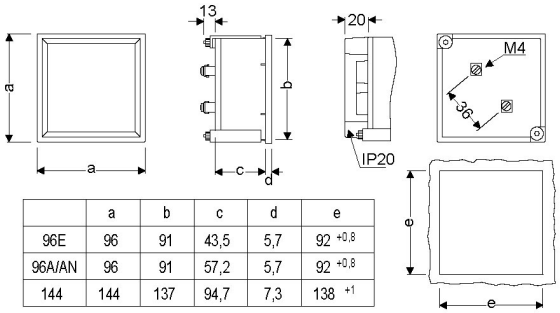

	a	b	c	d	e
96E	96	91	43,5	5,7	92 +0,8
96A/AN	96	91	57,2	5,7	92 +0,8
144	144	137	94,7	7,3	138 +1

Connections

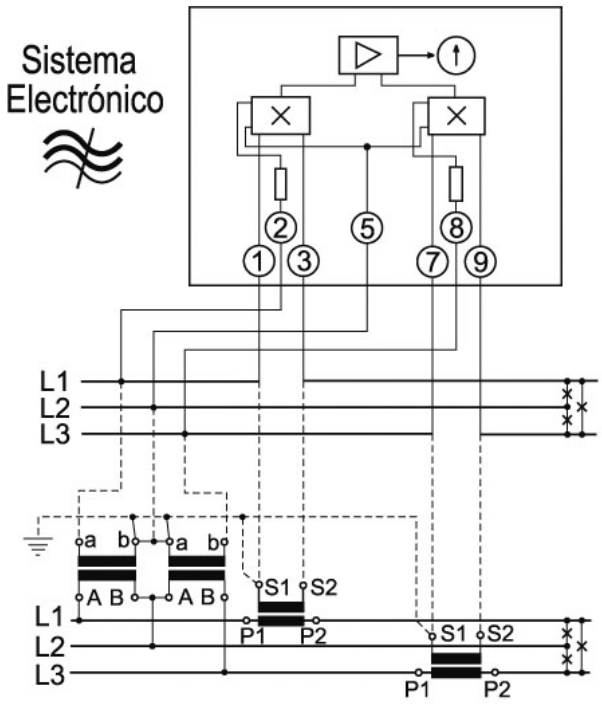

Creation date: 24/11/2026 - CIRCUTOR, SAU reserves the right to make technical changes or modify the content/images of this document without prior notice, in order to improve its reliability, functionality, design or for other reasons.
It accepts no liability for any errors, inaccuracies or possible lack of information in this document.