

2HLC144 45-55Hz

2HLC144 45-55Hz, Frequencymeter

Code: M129420060000 **CONSULTAR DISPONIBILIDAD**

> Accuracy: 0,5
> Measure: 45...55 Hz
> Frequency (Hz): 45...55, 21 láminas
> Modules: 144x144

Description

- Does not need an auxiliary power supply
- DIN box with dimensions 96 and 144 mm
- Class 1.5
- Double scale

Application

For the measurement and easy comparison of frequencies in alternating current circuits coming from generators or between the network and generator, when connected in parallel. The measurement is independent of the wave shape. For applications in severe environmental and physical conditions.

Creation date: 23/11/2026 - CIRCUTOR, SAU reserves the right to make technical changes or modify the content/images of this document without prior notice, in order to improve its reliability, functionality, design or for other reasons.
It accepts no liability for any errors, inaccuracies or possible lack of information in this document.



2HLC144 45-55Hz

Frecuencymeter, marine applications equipment

Code: M129420060000

Specifications

Mechanical characteristics

Size (mm) width x height x depth	144 x 144 x 91.8 (mm)
Weight (kg)	0,45

Environmental characteristics

Protection class	Panel: IP 52 (Front), IP 00 (Terminals)
Storage temperature	-25...+40 °C
Working temperature	+10 ... +30 °C

Standards

Certifications	CE
Electrical safety, Maximum height (m)	2000
Standards	BS 89, UNE-EN 60051, IEC 144, DIN 43780, IEC 51, UNE 21318

Voltage measurement circuit

Consumption	1 ... 3,6 VA
Sampling frequency	47 ... 53 Hz
Nominal voltage	230 V ~

Electrical characteristics

Insulation voltage, circuit	2kV a 50 Hz < 1min entre mecanismo y caja

Measurement accuracy

Accuracy	0,5 % FE

Creation date: 23/11/2026 - CIRCUTOR, SAU reserves the right to make technical changes or modify the content/images of this document without prior notice, in order to improve its reliability, functionality, design or for other reasons.
It accepts no liability for any errors, inaccuracies or possible lack of information in this document.



2HLC144 45-55Hz

Frecuencymeter, marine applications equipment

Code: M129420060000

Dimensions

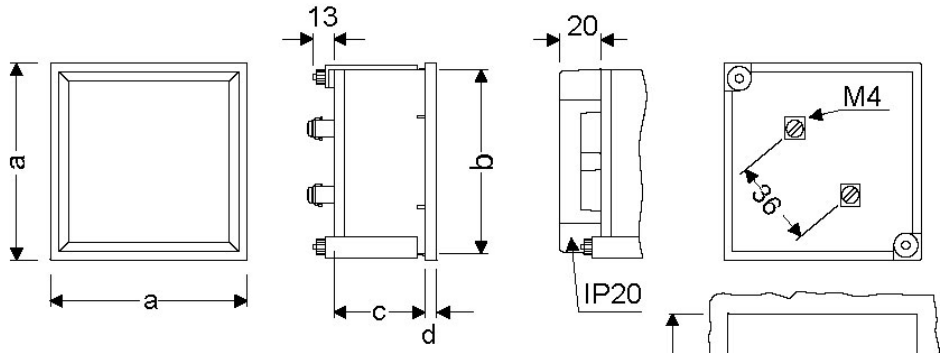

	a	b	c	d	e
96	96	91	57,2	5,7	$92^{+0,8}$
144	144	137	64,5	7,3	138^{+1}

Creation date: 23/11/2026 - CIRCUTOR, SAU reserves the right to make technical changes or modify the content/images of this document without prior notice, in order to improve its reliability, functionality, design or for other reasons.
It accepts no liability for any errors, inaccuracies or possible lack of information in this document.