

HLC96 57-63Hz 13L

HLC96 57-63Hz 13L, Frequencymeter

Code: M129310010000 **DESCATALOGADO**

> Accuracy: 0,5
> Measure: 57...63 Hz
> Frequency (Hz): 57...63, 13 láminas
> Modules: 96x96

Description

- Does not need an auxiliary power supply
- DIN box with dimensions: 72, 96 and 144 mm
- Class 0.5
- Independent measurement of the wave shape

Application

Measurement of the frequency in alternating current circuits, for any type of wave shape and under adverse environmental and physical conditions.

Creation date: 25/11/2026 - CIRCUTOR, SAU reserves the right to make technical changes or modify the content/images of this document without prior notice, in order to improve its reliability, functionality, design or for other reasons.
It accepts no liability for any errors, inaccuracies or possible lack of information in this document.



HLC96 57-63Hz 13L

Frequencymeters

Code: M129310010000

Specifications

Mechanical characteristics

Size (mm) width x height x depth	96 x 96 x 69.2 (mm)
Weight (kg)	0,3

Environmental characteristics

Protection class	Panel: IP 52 (Front), IP 00 (Terminals)
Storage temperature	-25...+40 °C
Working temperature	+10 ... +30 °C

Standards

Certifications	CE
Electrical safety, Maximum height (m)	2000
Standards	BS 89, UNE-EN 60051, IEC 144, DIN 43780, IEC 51, UNE 21318

Current measurement circuit

Allowable overload	1,5 In permanent / 15 In during 1s

Voltage measurement circuit

Consumption	2 ... 3 VA
Sampling frequency	50 ... 400 Hz
Nominal voltage	230 V ~

Electrical characteristics

Insulation voltage, circuit	2kV a 50 Hz < 1min entre mecanismo y caja

Measurement accuracy

Accuracy	0,5 % FE

HLC
Reed type frequencymeter

CODE	TYPE	Accuracy	Modules	Measure	Frequency (Hz)
M1292100C0000	HLC72 47-53Hz 13L	0,5	72x72	47...53 Hz	47...53, 13 láminas
M129310090000	HLC96 56-64Hz 17L	0,5	96x96	56...64 Hz	57...63, 17 láminas



HLC96 57-63Hz 13L

Frequencymeters

Code: M129310010000

Dimensions

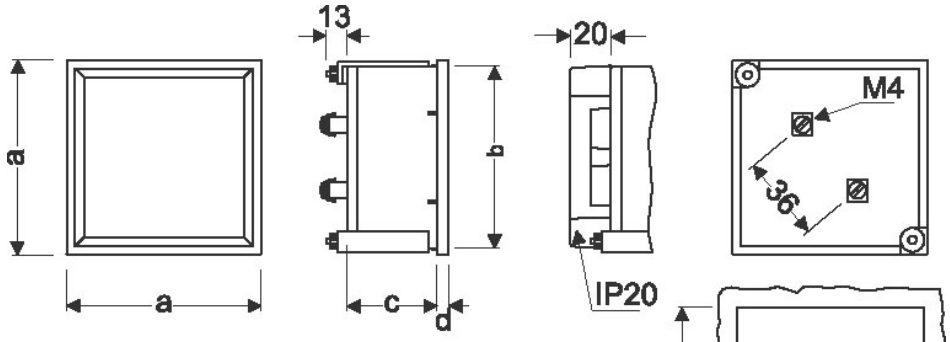

	a	b	c	d	e
72	72	67,2	43,5	5,7	68 +0,8
96	96	91	43,5	5,7	92 +0,8
96 (c)	96	91	57,2	5,7	92 +0,8
144	144	137	64,5	7,3	138 +1