

MMCSC45 .../5A

MMCSC45 .../5A, Maximeter

Code: M12661. **DESCATALOGADO**

> Scale: 90°, P1, 2

> Accuracy: 3

> Measurement Range (A): .../5 A

Description

- Does not need an auxiliary power supply
- DIN boxes with dimensions 48, 72, 96 and 144
- Class 3
- Measurement in AC of .../5 A (on demand.../ 1 A)
- Exchangeable scales for MC48, MC72, MC96, MM 45, EMC72, EMC96
- Thermal inertia times of 15 min (on demand, 8 and 30 min)

Application

To control the alternating current and measure long overloads in the same unit, integrated within a determined period.

Creation date: 23/11/2026 - CIRCUTOR, SAU reserves the right to make technical changes or modify the content/images of this document without prior notice, in order to improve its reliability, functionality, design or for other reasons.
It accepts no liability for any errors, inaccuracies or possible lack of information in this document.



MMCSC45 .../5A

Ammeters Maximeters

Code: M12661.

Specifications

Mechanical characteristics

Size (mm) width x height x depth	85 x 52 x 65 (mm)
Fastening	DIN rail
Weight (kg)	0,14

Environmental characteristics

Protection class	DIN rail: IP 52 (front), IP 00 (terminals)
Storage temperature	-25...+40 °C
Working temperature	+10 ... +30 °C

Standards

Certifications	UL
Electrical safety, Maximum height (m)	2000
Standards	BS 89, UNE-EN 60051, IEC 144, UL94, DIN 43780, IEC 51, UNE 21318

Current measurement circuit

Consumption	3,25 VA
Allowable overload	1,5 In permanent / 15 In during 1s

Electrical characteristics

Insulation voltage, circuit	2 KV A 50 HZ < 1min entre mecanismo y caja

Measurement accuracy

Accuracy	± 3 % FE

EMC

Maximeter ammeters

CODE	TYPE	Scale	Accuracy	Measurement Range (A)	Modules
M12632.	EMC96 .../5A	Doble escala 90°, P1,2, hierro móvil P2	Bimetálico	.../5 A	96x96

Scale NOT included

Creation date: 23/11/2026 - CIRCUTOR, SAU reserves the right to make technical changes or modify the content/images of this document without prior notice, in order to improve its reliability, functionality, design or for other reasons.
It accepts no liability for any errors, inaccuracies or possible lack of information in this document.



MMCSC45 .../5A

Ammeters Maximeters

Code: M12661.

Dimensions

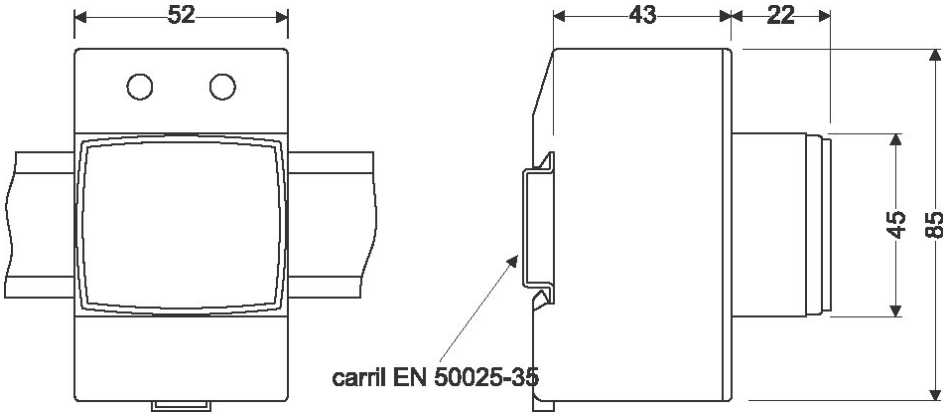

Creation date: 23/11/2026 - CIRCUTOR, SAU reserves the right to make technical changes or modify the content/images of this document without prior notice, in order to improve its reliability, functionality, design or for other reasons.
It accepts no liability for any errors, inaccuracies or possible lack of information in this document.