

BM45 60V

BM45 60V, Voltmeter

Code: M11756. **DESCATALOGADO**

> Scale: 90° , P1
> Accuracy: 1,5
> Measurement Range (V): 60
> Device: BM45

Description

- No need for auxiliary power supply,
- Precision class 1.5
- Measurement in DC 25 uA ... 60 A, or ... 60 mV
- Exchangeable scales

Application

In direct current applications, to control the state of the current quickly and visually.

Creation date: 24/11/2026 - CIRCUTOR, SAU reserves the right to make technical changes or modify the content/images of this document without prior notice, in order to improve its reliability, functionality, design or for other reasons.
It accepts no liability for any errors, inaccuracies or possible lack of information in this document.



BM45 60V

Moving coil voltmeters

Code: M11756.

Specifications

Mechanical characteristics

Size (mm) width x height x depth	85 x 65 x 52 (mm)
Fastening	DIN rail
Weight (kg)	0,11

Environmental characteristics

Protection class	DIN rail: IP 52 (front), IP 00 (terminals)
Storage temperature	-25...+40 °C
Working temperature	+10 ... +30 °C

Standards

Certifications	CE, UL
Electrical safety, Maximum height (m)	2000
Standards	BS 89, UNE-EN 60051, IEC 144, UL94, DIN 43780, IEC 51, UNE 21318

Voltage measurement circuit

Consumption	1000 Ω/V
Sampling frequency	20 ... 100 Hz
Maximum permanent measurement voltage	1,2 Vn / 2 Vn during 5s

Electrical characteristics

Insulation voltage, circuit	2 kV a 50Hz < 1 min entre mecanismo y caja

Measurement accuracy

Accuracy	1,5 % FE

Creation date: 24/11/2026 - CIRCUTOR, SAU reserves the right to make technical changes or modify the content/images of this document without prior notice, in order to improve its reliability, functionality, design or for other reasons.
It accepts no liability for any errors, inaccuracies or possible lack of information in this document.



BM45 60V

Moving coil voltmeters

Code: M11756.

Connections

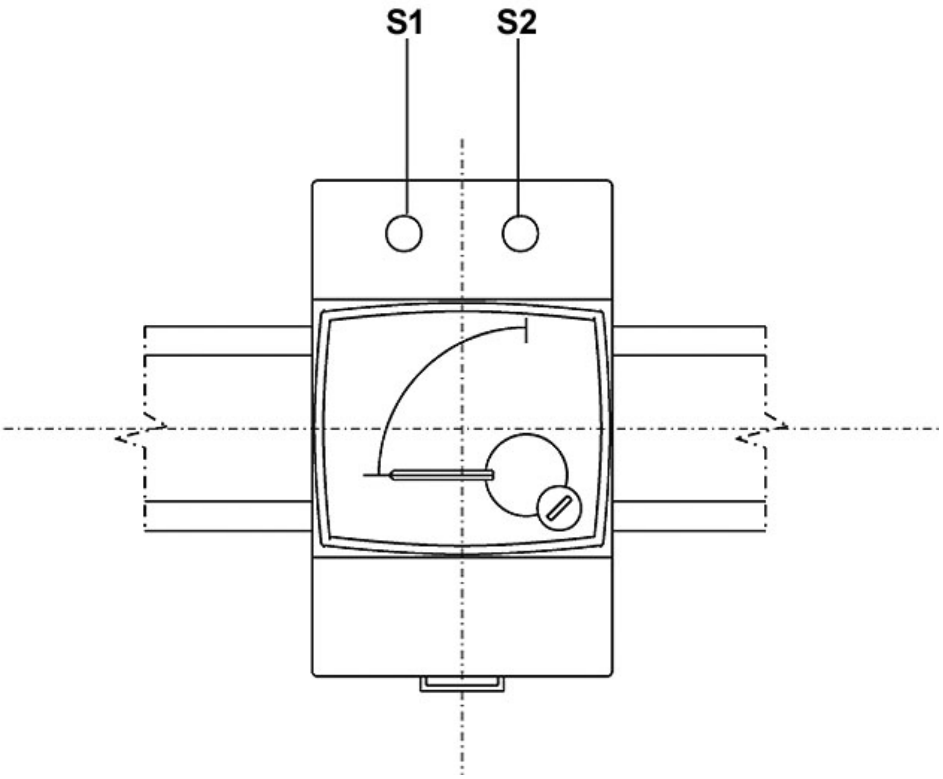

Creation date: 24/11/2026 - CIRCUTOR, SAU reserves the right to make technical changes or modify the content/images of this document without prior notice, in order to improve its reliability, functionality, design or for other reasons.
It accepts no liability for any errors, inaccuracies or possible lack of information in this document.