

BMSC45 5A

BMSC45 5A, Ammeter

Code: M11462. **DESCATALOGADO**

> Scale: 90° , P1
> Accuracy: 1,5
> Measurement Range (A): 5
> Device: BMSC45

Description

- No need for auxiliary power supply
- Precision class 1.5
- Measurement in DC 25 uA ... 60 A, or ... 60 mV
- Exchangeable scales

Application

In direct current applications, to control the state of the current quickly and visually.

Creation date: 27/11/2026 - CIRCUTOR, SAU reserves the right to make technical changes or modify the content/images of this document without prior notice, in order to improve its reliability, functionality, design or for other reasons.
It accepts no liability for any errors, inaccuracies or possible lack of information in this document.



BMSC45 5A

Moving coil ammeters

Code: M11462.

Specifications

Mechanical characteristics

Size (mm) width x height x depth	85 x 52 x 65 (mm)
Fastening	DIN rail
Weight (kg)	0,11

Environmental characteristics

Protection class	Panel: IP 52 (Front), IP 00 (Terminals)
Storage temperature	-25...+40 °C
Working temperature	+10 ... +30 °C

Standards

Certifications	CE
Electrical safety, Maximum height (m)	2000
Standards	BS 89, UNE-EN 60051, IEC 144, DIN 43780, IEC 51, UNE 21318

Current measurement circuit

Consumption	60 mV
Allowable overload	1,2 In permanent / 5 In during 30s / 10 In during 5s / 40 In during 1s

Electrical characteristics

Insulation voltage, circuit	2 kV a 50Hz < 1 min entre mecanismo y caja

Measurement accuracy

Accuracy	1,5 % FE

Exchangeable scales. External shunts, see section Measuring current transformers and shunts

Creation date: 27/11/2026 - CIRCUTOR, SAU reserves the right to make technical changes or modify the content/images of this document without prior notice, in order to improve its reliability, functionality, design or for other reasons.
It accepts no liability for any errors, inaccuracies or possible lack of information in this document.



BMSC45 5A

Moving coil ammeters

Code: M11462.

Dimensions

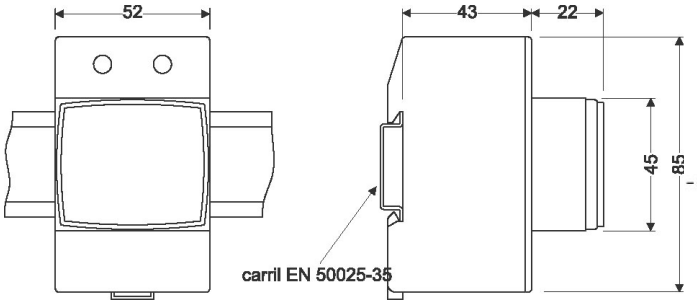

Connections

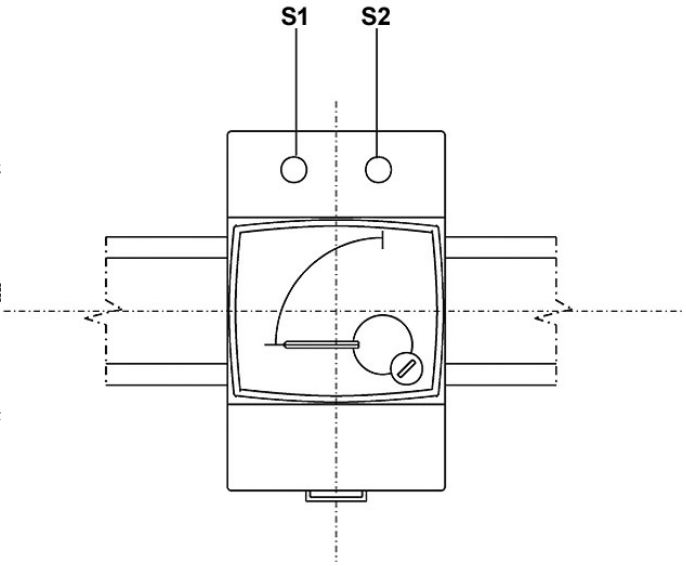

Creation date: 27/11/2026 - CIRCUTOR, SAU reserves the right to make technical changes or modify the content/images of this document without prior notice, in order to improve its reliability, functionality, design or for other reasons.
It accepts no liability for any errors, inaccuracies or possible lack of information in this document.