

EC96 FIII 300V

EC96 FIII 300V, Voltmeter

Code: M10636.

> Scale: 90°, P1
> System: Three-phase 3 wire
> Accuracy: 1,5
> Measurement Range (V): 300
> Modules: 96x96

Specifications

Mechanical characteristics

Size (mm) width x height x depth	96 x 96 x 49.2 (mm)
Fastening	Panel
Weight (kg)	0,22

Environmental characteristics

Protection class	Panel: IP 52 (Front), IP 00 (Terminals)
Storage temperature	-25...+40 °C
Working temperature	+10 ... +30 °C

Standards

Certifications	CE
Electrical safety, Maximum height (m)	2000
Standards	BS 89, UNE-EN 60051, IEC 144, DIN 43780, IEC 51, UNE 21318

Voltage measurement circuit

Consumption	1 ... 4 VA
Sampling frequency	20 ... 100 Hz
Maximum permanent measurement voltage	1,5 Vn permanent rated voltage / 2 Vn during 5s

Electrical characteristics

Insulation voltage, circuit	2 kV, 50 Hz, 1 min entre mecanismo y caja

Measurement accuracy

Accuracy	1,5 % FE

EC-F-V
Voltmeters with phase switch for AC measurement

CODE	TYPE	Scale	Accuracy	Modules
Three-phase 3 wire				
M10625.	EC72 FIII 250V	90°, P1	1,5	72x72
M10626.	EC72 FIII 300V	90°, P1	1,5	72x72



EC96 FIII 300V

Code: M10636.

CODE	TYPE	Scale	Accuracy	Modules
M10627.	EC72 FIII 400V	90°, P1	1,5	72x72
M10628.	EC72 FIII 500V	90°, P1	1,5	72x72
M10629.	EC72 FIII 600V	90°, P1	1,5	72x72
M10632.	EC96 FIII .../110V	90°, P1	1,5	72x72
M10635.	EC96 FIII 250V	90°, P1	1,5	96x96
M10636.	EC96 FIII 300V	90°, P1	1,5	96x96
M10637.	EC96 FIII 400V	90°, P1	1,5	96x96
M10638.	EC96 FIII 500V	90°, P1	1,5	96x96
M10639.	EC96 FIII 600V	90°, P1	1,5	96x96
Three-phase 4 wire				
M10725.	EC72 F III+N 250V	90°, P1	1,5	72x72
M10726.	EC72 F III+N 300V	90°, P1	1,5	72x72
M10727.	EC72 F III+N 400V	90°, P1	1,5	72x72
M10728.	EC72 F III+N 500V	90°, P1	1,5	72x72
M10729.	EC72 F III+N 600V	90°, P1	1,5	72x72
M10735.	EC96 F III+N 250V	90°, P1	1,5	96x96
M10736.	EC96 F III+N 300V	90°, P1	1,5	96x96
M10737.	EC96 F III+N 400V	90°, P1	1,5	96x96
M10738.	EC96 F III+N 500V	90°, P1	1,5	96x96
M10739.	EC96 F III+N 600V	90°, P1	1,5	96x96



EC96 FIII 300V

Code: M10636.

Dimensions

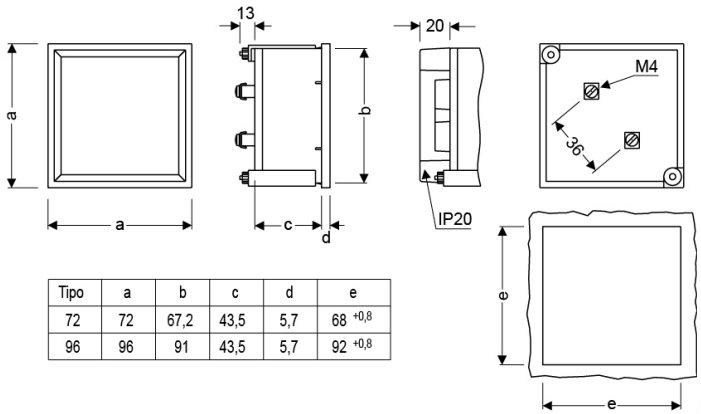

Tipo	a	b	c	d	e
72	72	67,2	43,5	5,7	68 $^{+0,8}$
96	96	91	43,5	5,7	92 $^{+0,8}$

Connections

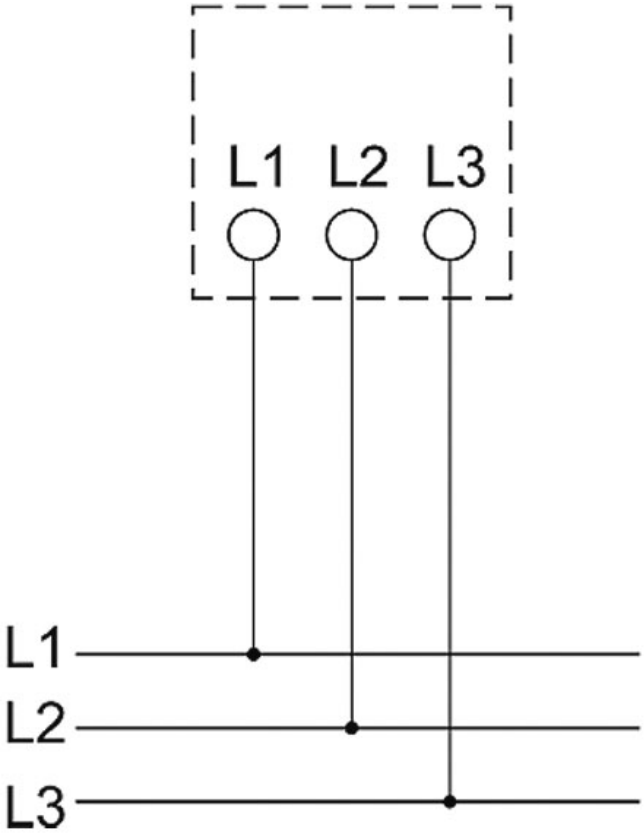

Creation date: 23/11/2026 - CIRCUTOR, SAU reserves the right to make technical changes or modify the content/images of this document without prior notice, in order to improve its reliability, functionality, design or for other reasons.
It accepts no liability for any errors, inaccuracies or possible lack of information in this document.