

STM-S-24-485

STM-S-24-485

Code: E85SE1. **DESCATALOGADO**

> Protocol: Modbus RTU
> Communications: RS-485
> Digital inputs: 3
> Measure: 30 A
> Power supply (Vac): 24 Vdc
> Mounting: DIN rail

Description

STM-S is an intelligent analyser with up to 24 channels. Specifically designed for monitoring photovoltaic strings, the **STM-S** ensures maximum photovoltaic field performance thanks to its high measurement accuracy. It is equipped with the intelligence to calculate power, compare string performance, detect reverse currents, manage alarms, etc. The device is available in 12- or 24-channel configurations.

Its main features are as follows:

- Voltage input (1.500 V dc)
- Current measurement up to 45 A (12-channel configuration) or 30 A per channel (24-channel configuration)
- 1 input for Pt100
- 3 potential-free digital inputs
- Wireless LoRa communications module

Its compact size, installation flexibility, intelligence and robustness make the **STM-S** the perfect device for monitoring the correct operation of the photovoltaic field.

Application

Supervision of photovoltaic strings in solar farms and self-consumption installations

Creation date: 23/11/2026 - CIRCUTOR, SAU reserves the right to make technical changes or modify the content/images of this document without prior notice, in order to improve its reliability, functionality, design or for other reasons.
It accepts no liability for any errors, inaccuracies or possible lack of information in this document.

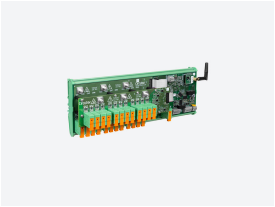

STM-S-24-485

Analyser for photovoltaic strings

Code: E85SE1.

Specifications

DC power supply

Installation category	CAT II 1500 V
Consumption	3.6 W
Nominal voltage	24 V ±10%

Mechanical characteristics

Size (mm) width x height x depth	337.5 x 114 x 94.5 (mm)
Envelope	Self-extinguishing V0 plastic
Fastening	DIN rail
Weight (kg)	0,82

Environmental characteristics

Protection class	IP 00
Relative humidity (without condensation)	5 ... 95 %
Installation, location, position.	3000 m
Storage temperature	-25...+80 °C
Working temperature	-25...+70 °C

Current measurement circuit

Installation category	CAT II 1500 V
Consumption	1 Chanel: 1.0125 W
Impedance	0.5 mΩ
Phase current measuring range	0.1 ... 30 A DC
Minimum current measurement	0.1 A

Voltage measurement circuit

Installation category	CAT II 1500 V
Input impedance	2400 kΩ
Voltage measuring range	-25 ... -1500 Vdc
Maximum input voltage consumption	0,625 mA
Minimum measurement voltage (Vstart)	-25 V

Input

Accuracy	± 3°C
Range	-30 ... 100°C
Resolution	±0,1 mA
Type	Pt100/1000

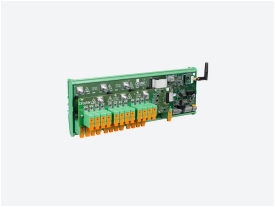

STM-S-24-485

Analyser for photovoltaic strings

Code: E85SE1.

Standards

Electrical safety, Maximum height (m)	3000
Electrical safety, Installation category	Protection against electric shock: Double class II insulation
Standards	EN 61000-6-2, EN 61000-6-4, EN 61010-1, EN 61010-2-30

User interface

LED	4

Digital inputs

Input/output insulation	Optoisolated
Quantity	3
Type	Potential free contact
Maximum short-circuit current	3.2 mA
Maximum open circuit voltage	24 V

The minimum configuration of the STM solution is made up of an STM-C module and an STM-S module

Creation date: 23/11/2026 - CIRCUTOR, SAU reserves the right to make technical changes or modify the content/images of this document without prior notice, in order to improve its reliability, functionality, design or for other reasons.
It accepts no liability for any errors, inaccuracies or possible lack of information in this document.

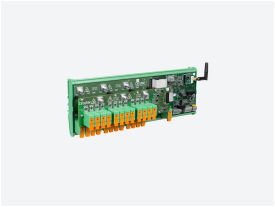

STM-S-24-485

Analyser for photovoltaic strings

Code: E85SE1.

Dimensions

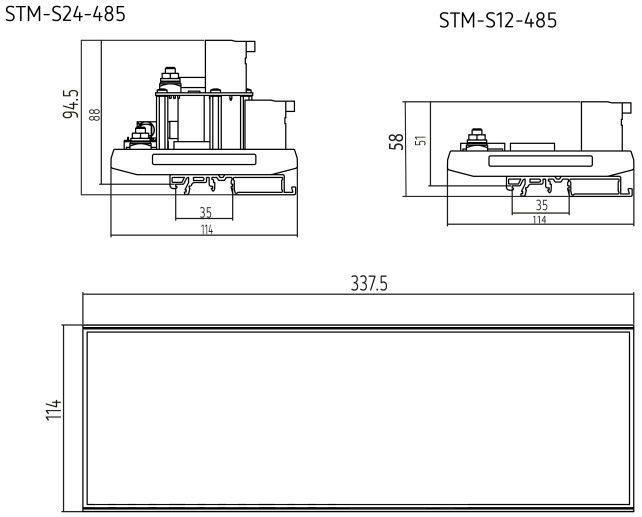

Connections

