

Kit line-TCPRS1/2xM-20I

Kit line-TCPRS1/2xM-20I, Pulse and contact centraliser

Code: D90031.

> Protocol: ModbusTCP | TCP | UDP

> Módules: 9

> Communications: Ethernet | Wi-Fi

> Digital inputs: 40

Description

Pulse centralizing device to fully manage the consumption of any installation. It can send data to a higher-level SCADA system thanks to the **line-TCPRS1** gateway, which incorporates Wi-Fi and Ethernet communications.

Application

Manage consumption in:

- Shopping centres
- Flats
- Industry
- Ports and campgrounds

Creation date: 23/11/2026 - CIRCUTOR, SAU reserves the right to make technical changes or modify the content/images of this document without prior notice, in order to improve its reliability, functionality, design or for other reasons.
It accepts no liability for any errors, inaccuracies or possible lack of information in this document.

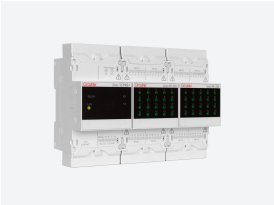

Kit line-TCPRS1/2xM-20I

Impulse centralizer kits

Code: D90031.

Specifications

AC power supply

Installation category	CAT III 300 V
Consumption	10,5 ... 14,5 VA
Frequency	50 ... 60 Hz
Nominal voltage	100 ... 264 V ~

DC power supply

Installation category	CAT III 300 V
Consumption	9 ... 9,5 W
Nominal voltage	100 ... 300 Vdc

Mechanical characteristics

Size (mm) width x height x depth	158 x 118 x 70 (mm)
Envelope	Self-extinguishing V0 plastic
Fastening	DIN rail
Weight (kg)	0,792

Environmental characteristics

Protection class	IP30, Front: IP40
Relative humidity (without condensation)	5 ... 95%
Storage temperature	-20 ... +70 °C
Working temperature	-10 ... +50 °C

Communication Network

Connection mechanism	RJ-45
Technology / Interface	Ethernet 10 /100 BT

Standards

Electrical safety, Maximum height (m)	2000
Electrical safety, Installation category	CAT III 300V
Standards	UNE-EN 61010-1, UNE-EN 61000-6-2, UNE-EN 61000-6-4

User interface

LED	49 LED

Digital inputs

Input/output insulation	4,2 kVdc
Quantity	40
Consumption (per input)	60 mA inputs OFF / 240 mA inputs ON

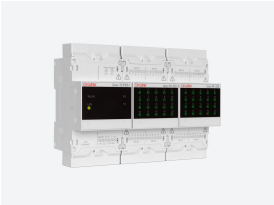

Kit line-TCPRS1/2xM-20I

Impulse centralizer kits

Code: D90031.

Type	Optocoupled

Wireless communication

Band	2,4 GHZ.|IEEE 802.11 b: 20 dBm / IEEE 802.11 n: 14 dBm
Technology / Type	Wi-Fi

Kit Line-TCPRS1/M
Impulse centralisers

CODE	TYPE
D90030.	Kit line-TCPRS1/M-20I
D90031.	Kit line-TCPRS1/2xM-20I

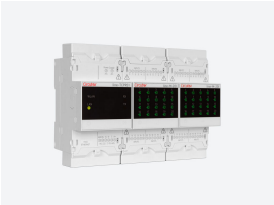

Kit line-TCPRS1/2xM-20I

Impulse centralizer kits

Code: D90031.

Dimensions

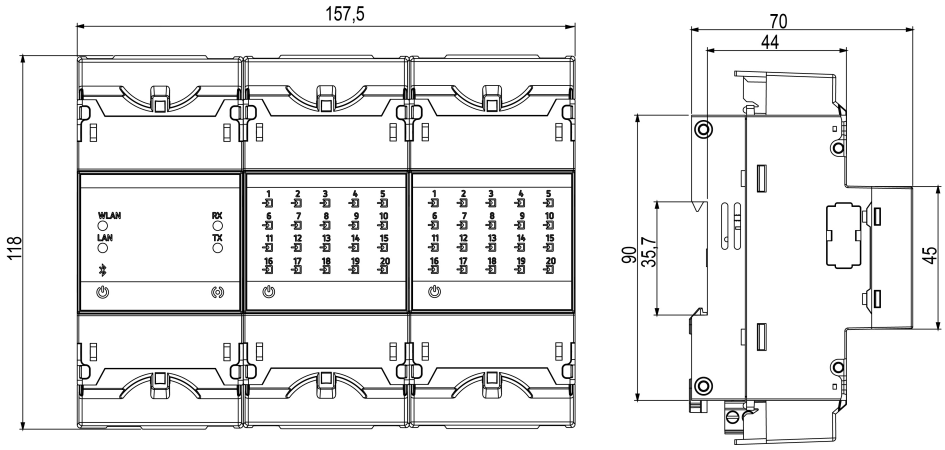

Creation date: 23/11/2026 - CIRCUTOR, SAU reserves the right to make technical changes or modify the content/images of this document without prior notice, in order to improve its reliability, functionality, design or for other reasons.
It accepts no liability for any errors, inaccuracies or possible lack of information in this document.