

Line-M-20I

Line-M-20I, Centralizer module with 20 digital inputs

Code: D73006.

> Protocol: Modbus RTU
> Communications: Bus-Line
> Digital inputs: 20
> Mounting: DIN rail

Description

The line-M-20I is a centraliser with 20 digital inputs that is designed to centralise the logical status of each signal or to count the number of impulses at each input.

Application

• Centralise consumption at installations such as: shopping centres, hotels, campsites, etc. • Pulse receiver for water, gas and other meters.

Creation date: 24/11/2026 - CIRCUTOR, SAU reserves the right to make technical changes or modify the content/images of this document without prior notice, in order to improve its reliability, functionality, design or for other reasons.
It accepts no liability for any errors, inaccuracies or possible lack of information in this document.



Line-M-20I

Impulse centraliser

Code: D73006.

Specifications

AC power supply

Installation category	CAT III 300V

DC power supply

Consumption	3,5 W
Nominal voltage	12 Vdc

Mechanical characteristics

Size (mm) width x height x depth	52.5 x 118 x 70 (mm)
Envelope	Self-extinguishing V0 plastic
Fastening	DIN rail (IEC 60715)
Weight (kg)	0,178

Environmental characteristics

Protection class	IP30, Front: IP40
Relative humidity (without condensation)	5 ... 95%
Storage temperature	-20 ... +70 °C
Working temperature	-10 ... +50 °C

Voltage measurement circuit

Input impedance	1.4 kΩ

Standards

Electrical safety, Maximum height (m)	2000
Electrical safety, Installation category	CAT III 300 V
Standards	UNE-EN 61010-1, UNE-EN 61000-6-2, UNE-EN 61000-6-4

User interface

LED	21 LED

Digital inputs

Input/output insulation	4,2 kVcc
Quantity	20
Consumption (per input)	60 mA Eingänge AUS / 240 mA Eingänge EIN
Type	Optocoupler
Minimum signal width	10 ms

Digital transistor outputs

Maximum current	120mA

Creation date: 24/11/2026 - CIRCUTOR, SAU reserves the right to make technical changes or modify the content/images of this document without prior notice, in order to improve its reliability, functionality, design or for other reasons.
It accepts no liability for any errors, inaccuracies or possible lack of information in this document.



Line-M-20I

Impulse centraliser

Code: D73006.

Line-M-20I
Expansion modules pulse inputs, Line series

CODE	TYPE	Protocol	Nº relays	Digital inputs
Input/Output Modules				
D73006.	Line-M-20I	Modbus RTU	-	20

Bus-Line: RS-485 communication system, with side connector between modules



Line-M-20I

Impulse centraliser

Code: D73006.

Dimensions

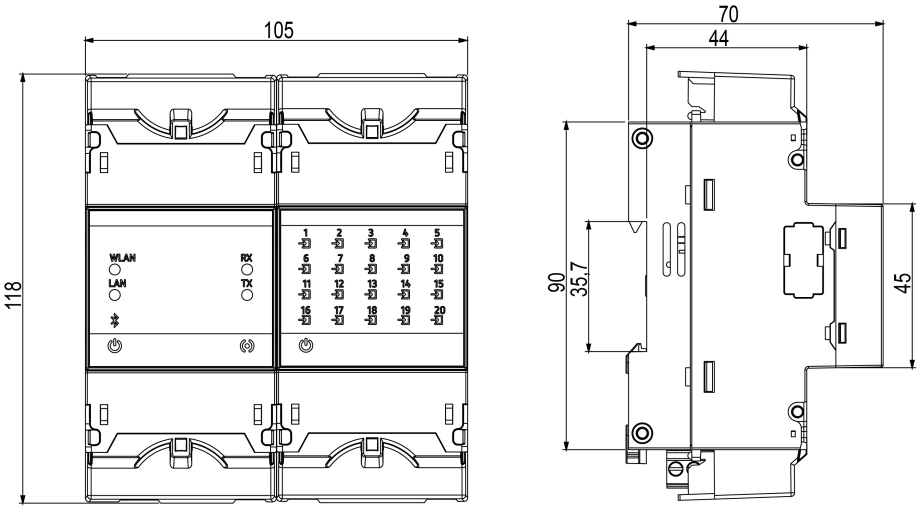

Connections

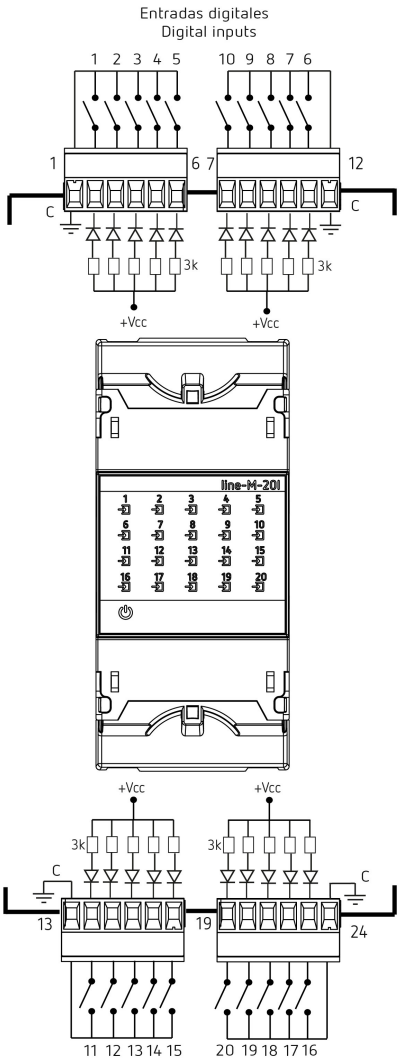

Creation date: 24/11/2026 - CIRCUTOR, SAU reserves the right to make technical changes or modify the content/images of this document without prior notice, in order to improve its reliability, functionality, design or for other reasons.
It accepts no liability for any errors, inaccuracies or possible lack of information in this document.